A G E N D A

REGULAR MEETING OF THE PRESIDENT AND BOARD OF TRUSTEES OF THE VILLAGE OF WILLOWBROOK TO BE HELD ON MONDAY, APRIL 12, 2010, AT 7:30 P.M. AT THE VILLAGE HALL, 7760 QUINCY STREET, IN THE VILLAGE OF WILLOWBROOK, DUPAGE COUNTY, ILLINOIS

1. CALL TO ORDER

2. ROLL CALL

3. PLEDGE OF ALLEGIANCE

4. MOTION - BOARD ADVICE AND CONSENT TO PRESIDENT'S APPOINTMENT OF UMBERTO S. DAVI TO FILL A VACANCY IN THE OFFICE OF VILLAGE TRUSTEE

5. OATH OF OFFICE

6. ROLL CALL

7. OMNIBUS VOTE AGENDA
   a. Waive Reading of Minutes (APPROVE)
   b. Minutes - Special Board Meeting - March 15, 2010 (APPROVE)
   c. Minutes - Regular Board Meeting - March 22, 2010 (APPROVE)
   d. Minutes - Executive Session - February 22, 2010 (APPROVE)
   e. Minutes - Executive Session - March 8, 2010 (APPROVE)
   f. Minutes - Executive Session - Budget Workshop - March 1, 2010 (APPROVE)
   g. Minutes - Executive Session - March 15, 2010 (APPROVE)
   h. Minutes - Executive Session - March 22, 2010 (APPROVE)
   i. Warrants - April 12, 2010 - $150,221.02 (APPROVE)
   j. Monthly Financial Report - March 31, 2010 - $14,935,382.71 (ACCEPT)
   k. APPLICATION FOR LICENSE TO HOLD A RAFFLE - TEEN PARENT CONNECTION - APRIL 23, 2010 (APPROVE)
   l. RESIGNATION OF ETHICS OFFICER - KATHERINE PATERNO (ACCEPT)
   m. RESOLUTION NO. 10-R-11 - A RESOLUTION OPPOSING REDUCTION OF LOCAL GOVERNMENT DISTRIBUTIVE FUND (ADOPT)

n. RESOLUTION NO. 10-R-12 - A RESOLUTION AUTHORIZING THE VILLAGE PRESIDENT AND VILLAGE CLERK TO EXECUTE A CERTAIN AGREEMENT - DUPAGE CONVENTION AND VISITORS BUREAU (ADOPT)

o. RESOLUTION NO. 10-R-13 - A RESOLUTION TO ADOPT MUNICIPAL LEGISLATIVE POSITIONS AND PRIORITIES FOR THE 2010 LEGISLATIVE SESSION (ADOPT)

p. RESOLUTION NO. 10-R-14 - A RESOLUTION ACKNOWLEDGING REQUIREMENTS OF THE ILLINOIS DEPARTMENT OF TRANSPORTATION (IDOT) AS THEY PERTAIN TO THE MAINTENANCE OF VILLAGE OWNED UTILITIES LOCATED WITHIN STATE RIGHTS-OF-WAY (ADOPT)

q. RESOLUTION NO. 10-R-15 - A RESOLUTION WAIVING THE COMPETITIVE BIDDING PROCESS AND AUTHORIZING THE VILLAGE PRESIDENT AND VILLAGE CLERK TO EXECUTE A CERTAIN AGREEMENT - LANDSCAPE FERTILIZATION SERVICES - BETWEEN THE VILLAGE OF WILLOWBROOK AND SPRING GREEN LAWN AND TREE CARE (ADOPT)

r. RESOLUTION NO. 10-R-16 - A RESOLUTION WAIVING THE COMPETITIVE BIDDING PROCESS AND AUTHORIZING THE VILLAGE PRESIDENT AND VILLAGE CLERK TO EXECUTE A CERTAIN AGREEMENT - JANITORIAL SERVICES - BETWEEN THE VILLAGE OF WILLOWBROOK AND BEST QUALITY CLEANING, INC. (ADOPT)

s. RESOLUTION NO. 10-R-17 - A RESOLUTION WAIVING THE COMPETITIVE BIDDING PROCESS AND AUTHORIZING THE PRESIDENT AND VILLAGE CLERK TO EXECUTE A CERTAIN AGREEMENT - STREETLIGHT MAINTENANCE SERVICES - BETWEEN THE VILLAGE OF WILLOWBROOK AND MEADE ELECTRIC COMPANY, INC. (ADOPT)

NEW BUSINESS

8. VISITOR'S BUSINESS (Public comment is limited to three minutes per person on agenda items only)

9. POLICE DEPARTMENT AWARDS

10. MOTION - BOARD ADVICE AND CONSENT TO PRESDIENT'S APPOINTMENT OF ROBERT A. NOVELLE, JR. TO FILL A VACANCY IN THE OFFICE OF VILLAGE ETHICS OFFICER

11. MOTION - BOARD ADVICE AND CONSENT TO PRESIDENT'S REAPPOINTMENT OF STEPHEN LANDSMAN TO THE OFFICE OF MEMBER OF THE VILALGE BOARD OF POLICE COMMISSIONERS

12. MOTION - BOARD ADVICE AND CONSENT TO PRESIDENT'S APPOINTMENT OF JOSEPH HEERY TO FILL A VACANCY IN THE OFFICE OF MEMBER OF THE VILLAGE BOARD OF POLICE COMISSIONERS

13. RESOLUTION - A RESOLUTION AWARDING THE FISCAL YEAR 2010-11 MOTOR FUEL TAX ROADWAY MAINTENANCE PROGRAM CONTRACT TO JAMES D. FIALA PAVING COMPANY, INC. IN THE AMOUNT OF $191,689.00

14. RESOLUTION - A RESOLUTION WAIVING THE COMPETITIVE BIDDING PROCESS AND AUTHORIZING THE PRESIDENT AND VILLAGE CLERK TO ACCEPT A PROPOSAL FOR THE COMPLETION OF THE ADAMS STREET DRAINAGE IMPROVEMENT PROJECT - SCOTT CONTRACTING, INC.

15. RESOLUTION - A RESOLUTION AUTHORIZING THE PRESIDENT AND VILLAGE CLERK TO ENTER INTO AN EMPLOYMENT AGREEMENT BETWEEN THE VILLAGE OF WILLOWBROOK AND MARK SHELTON AS ITS CHIEF OF POLICE

16. ORDINANCE - AN ORDINANCE AMENDING THE VILLAGE CODE OF THE VILLAGE OF WILLOWBROOK - TITLE 6, SECTION 6-8-3 - WATER SYSTEM; RATES

17. RESOLUTION - A RESOLUTION AUTHORIZING THE PRESIDENT AND VILLAGE CLERK TO RENEW AN AGREEMENT FOR MANAGEMENT SERVICES

PRIOR BUSINESS

18. COMMITTEE REPORTS

19. ATTORNEY'S REPORT

20. CLERK'S REPORT

21. ADMINISTRATOR'S REPORT

22. PRESIDENT'S REPORT

23. EXECUTIVE SESSION

24. ADJOURNMENT

VILLAGE OF WILLOWBROOK

BOARD MEETING

AGENDA ITEM - HISTORY/COMMENTARY

ITEM TITLE: MOTION – BOARD ADVICE AND CONSENT TO PRESIDENT'S APPOINTMENT OF UMBERTO DAVI TO FILL A VACANCY IN THE OFFICE OF VILLAGE TRUSTEE

AGENDA NO. 4

AGENDA DATE: 4/12/2010

STAFF REVIEW: **SIGNATURE:**

LEGAL REVIEW: N/A **SIGNATURE:**

RECOMMENDED BY VILLAGE ADMIN.: **SIGNATURE:**

REVIEWED & APPROVED BY COMMITTEE: YES ☐ NO ☐ N/A ☒

ITEM HISTORY (PREVIOUS VILLAGE BOARD REVIEWS, ACTIONS RELATED TO THIS ITEM, OTHER PERTINENT HISTORY)

The Village President has the authority to appoint a resident to fill the vacant position of Village Trustee with the advice and consent of the Board of Trustees.

ITEM COMMENTARY (BACKGROUND, DISCUSSION, KEY POINTS, RECOMMENDATIONS, ETC.)

The Village President recommends the appointment of Umberto S. Davi to fill the Village Trustee position that became vacant with the resignation of Dr. Timothy McMahon. Mr. Davi is a long time resident of the Village and has served the community in the capacity of President of the Police Pension Fund Board since 1996 as well as serving on the 50th Anniversary Committee. Mr. Davi will serve in the capacity of Village Trustee until the next municipal election in April 2011. Mr. Davi's resume is attached.

ACTION PROPOSED: A motion to concur with the Village President's recommendation to appoint Umberto S. Davi to the position of Village Trustee.

UMBERTO S. DAVI
DAVI and ASSOCIATES, P.C.
Attorneys at Law
1105 W. Burlington Avenue
Western Springs, Illinois 60558
(708) 246-7277
udavilaw@ameritech.net

CURRICULUM VITAE

The John Marshall Law School, 1982 graduate with distinction, upper 10%. **Order of John Marshall** and **Phi Alpha Delta Law Fraternity**. **Alumni Board of Directors** (President 2005-2006), 1997 recipient of the Distinguished Service Award.
The John Marshall Law School Board of Trustees (2nd Vice President).

Western Illinois University, B.S. in Psychology, graduated **Phi Kappa Phi** (National Honors Society), Dean's List with High Honors.

Born May 16, 1950 in Italy, immigrated to America in 1964, with mother and two brothers. Naturalized in 1974.

Solo practitioner with offices in Western Springs since 1983; practice concentrated in family law and real estate.

- **Illinois State Bar Association (ISBA)** (Member since 1982), **Assembly** (6 years), **Board of Governors** (third term, 8 years), past **Secretary and Treasurer;** Family Law Section Council, Judicial Evaluation Committee, Bar Election Committee, Scope and Correlation Committee, past member and chair of the Agenda Committee.
- **Illinois Bar Foundation,** Fellow and Past-Chair of the Fellows (2004-2006);
- **DuPage County Bar Association**; Chair Family Law Committee (2005-2006), Chair Real Estate Committee (2003-2004), Chair Evaluation Rules Revision Committee, panel member of the Expedited Matrimonial Fees Arbitration program.
- Cook County Arbitration program panel member (15 years).
- **West Suburban Bar Association,** Board of Governors and member.
- **Cook County Justinian Society of Lawyers,** Member and past President (1995-1996), current co-chair of Scholarship Committee.
- **DuPage County Justinian Society,** member; 2006 recipient of the Justice Anthony M. Peccarelli award,
- **Joint Civic Committee of Italian Americans** (JCCIA), life member, President's Advisory Board and Human Relations Committee
- **Sicilian American Cultural Association** (SACA), founding member
- **Western Springs Business Association**, past member
- **Willowbrook Police Pension Board**, Trustee and President since 2001.

Married to Janet for 31 years and proud father of four boys: Dion (39), an attorney, Michael (21), 4th year Western Illinois University, Ryan (18), freshman at Augustana College, and Evan (16), Jr. at Hinsdale South High School.

Rev. 3/2010

A G E N D A

REGULAR MEETING OF THE PRESIDENT AND BOARD OF TRUSTEES OF THE VILLAGE OF WILLOWBROOK TO BE HELD ON MONDAY, APRIL 12, 2010, AT 7:30 P.M. AT THE VILLAGE HALL, 7760 QUINCY STREET, IN THE VILLAGE OF WILLOWBROOK, DUPAGE COUNTY, ILLINOIS

1. CALL TO ORDER

2. ROLL CALL

3. PLEDGE OF ALLEGIANCE

4. MOTION - BOARD ADVICE AND CONSENT TO PRESIDENT'S APPOINTMENT OF UMBERTO S. DAVI TO FILL A VACANCY IN THE OFFICE OF VILLAGE TRUSTEE

5. OATH OF OFFICE

6. ROLL CALL

7. OMNIBUS VOTE AGENDA
   a. Waive Reading of Minutes (APPROVE)
   b. Minutes - Special Board Meeting - March 15, 2010 (APPROVE)
   c. Minutes - Regular Board Meeting - March 22, 2010 (APPROVE)
   d. Minutes - Executive Session - February 22, 2010 (APPROVE)
   e. Minutes - Executive Session - March 8, 2010 (APPROVE)
   f. Minutes - Executive Session - Budget Workshop - March 1, 2010 (APPROVE)
   g. Minutes - Executive Session - March 15, 2010 (APPROVE)
   h. Minutes - Executive Session - March 22, 2010 (APPROVE)
   i. Warrants - April 12, 2010 - $150,221.02 (APPROVE)
   j. Monthly Financial Report - March 31, 2010 - $14,935,382.71 (ACCEPT)
   k. APPLICATION FOR LICENSE TO HOLD A RAFFLE - TEEN PARENT CONNECTION - APRIL 23, 2010 (APPROVE)
   l. RESIGNATION OF ETHICS OFFICER - KATHERINE PATERNO (ACCEPT)
   m. RESOLUTION NO. 10-R-11 - A RESOLUTION OPPOSING REDUCTION OF LOCAL GOVERNMENT DISTRIBUTIVE FUND (ADOPT)

n. RESOLUTION NO. 10-R-12 - A RESOLUTION AUTHORIZING THE VILLAGE PRESIDENT AND VILLAGE CLERK TO EXECUTE A CERTAIN AGREEMENT - DUPAGE CONVENTION AND VISITORS BUREAU (ADOPT)

o. RESOLUTION NO. 10-R-13 - A RESOLUTION TO ADOPT MUNICIPAL LEGISLATIVE POSITIONS AND PRIORITIES FOR THE 2010 LEGISLATIVE SESSION (ADOPT)

p. RESOLUTION NO. 10-R-14 - A RESOLUTION ACKNOWLEDGING REQUIREMENTS OF THE ILLINOIS DEPARTMENT OF TRANSPORTATION (IDOT) AS THEY PERTAIN TO THE MAINTENANCE OF VILLAGE OWNED UTILITIES LOCATED WITHIN STATE RIGHTS-OF-WAY (ADOPT)

q. RESOLUTION NO. 10-R-15 - A RESOLUTION WAIVING THE COMPETITIVE BIDDING PROCESS AND AUTHORIZING THE VILLAGE PRESIDENT AND VILLAGE CLERK TO EXECUTE A CERTAIN AGREEMENT - LANDSCAPE FERTILIZATION SERVICES - BETWEEN THE VILLAGE OF WILLOWBROOK AND SPRING GREEN LAWN AND TREE CARE (ADOPT)

r. RESOLUTION NO. 10-R-16 - A RESOLUTION WAIVING THE COMPETITIVE BIDDING PROCESS AND AUTHORIZING THE VILLAGE PRESIDENT AND VILLAGE CLERK TO EXECUTE A CERTAIN AGREEMENT - JANITORIAL SERVICES - BETWEEN THE VILLAGE OF WILLOWBROOK AND BEST QUALITY CLEANING, INC. (ADOPT)

s. RESOLUTION NO. 10-R-17 - A RESOLUTION WAIVING THE COMPETITIVE BIDDING PROCESS AND AUTHORIZING THE PRESIDENT AND VILLAGE CLERK TO EXECUTE A CERTAIN AGREEMENT - STREETLIGHT MAINTENANCE SERVICES - BETWEEN THE VILLAGE OF WILLOWBROOK AND MEADE ELECTRIC COMPANY, INC. (ADOPT)

NEW BUSINESS

8. VISITOR'S BUSINESS (Public comment is limited to three minutes per person on agenda items only)

9. POLICE DEPARTMENT AWARDS

10. MOTION - BOARD ADVICE AND CONSENT TO PRESDIENT'S APPOINTMENT OF ROBERT A. NOVELLE, JR. TO FILL A VACANCY IN THE OFFICE OF VILLAGE ETHICS OFFICER

11. MOTION - BOARD ADVICE AND CONSENT TO PRESIDENT'S REAPPOINTMENT OF STEPHEN LANDSMAN TO THE OFFICE OF MEMBER OF THE VILALGE BOARD OF POLICE COMMISSIONERS

12. MOTION - BOARD ADVICE AND CONSENT TO PRESIDENT'S APPOINTMENT OF JOSEPH HEERY TO FILL A VACANCY IN THE OFFICE OF MEMBER OF THE VILLAGE BOARD OF POLICE COMISSIONERS

13. RESOLUTION - A RESOLUTION AWARDING THE FISCAL YEAR 2010-11 MOTOR FUEL TAX ROADWAY MAINTENANCE PROGRAM CONTRACT TO JAMES D. FIALA PAVING COMPANY, INC. IN THE AMOUNT OF $191,689.00

14. RESOLUTION - A RESOLUTION WAIVING THE COMPETITIVE BIDDING PROCESS AND AUTHORIZING THE PRESIDENT AND VILLAGE CLERK TO ACCEPT A PROPOSAL FOR THE COMPLETION OF THE ADAMS STREET DRAINAGE IMPROVEMENT PROJECT - SCOTT CONTRACTING, INC.

15. RESOLUTION - A RESOLUTION AUTHORIZING THE PRESIDENT AND VILLAGE CLERK TO ENTER INTO AN EMPLOYMENT AGREEMENT BETWEEN THE VILLAGE OF WILLOWBROOK AND MARK SHELTON AS ITS CHIEF OF POLICE

16. ORDINANCE - AN ORDINANCE AMENDING THE VILLAGE CODE OF THE VILLAGE OF WILLOWBROOK - TITLE 6, SECTION 6-8-3 - WATER SYSTEM; RATES

17. RESOLUTION - A RESOLUTION AUTHORIZING THE PRESIDENT AND VILLAGE CLERK TO RENEW AN AGREEMENT FOR MANAGEMENT SERVICES

PRIOR BUSINESS

18. COMMITTEE REPORTS

19. ATTORNEY'S REPORT

20. CLERK'S REPORT

21. ADMINISTRATOR'S REPORT

22. PRESIDENT'S REPORT

23. EXECUTIVE SESSION

24. ADJOURNMENT

MINUTES OF THE SPECIAL MEETING OF THE PRESIDENT AND BOARD OF TRUSTEES OF THE VILLAGE OF WILLOWBROOK HELD ON MONDAY, MARCH 15, 2010, AT THE VILLAGE HALL, 7760 QUINCY STREET, IN THE VILLAGE OF WILLOWBROOK, DUPAGE COUNTY, ILLINOIS.

1. CALL TO ORDER

The meeting was called to order at the hour of 6:30 p.m. by Village President Robert Napoli.

2. ROLL CALL

Those present at roll call were Trustees Terrence Kelly, Michael Mistele, Sandra O'Connor, Timothy McMahon and President Napoli. ABSENT: Trustees Dennis Baker and Paul Schoenbeck. Also present were Village Clerk Leroy Hansen, Interim Village Administrator Larry Maholland, Interim Village Administrator Megan Pierce and Director of Municipal Services Timothy Halik.

A QUORUM WAS DECLARED

3. EXECUTIVE SESSION

President Napoli asked for a motion to adjourn into Executive Session for the purpose cited as follows:

- Collective Negotiating matters pursuant to Chapter 5 ILCS 120/2(c)2
- Salary schedules pursuant to Chapter 5 ILCS 120/2(c)2
- Personnel matters embracing the possible appointment, employment, compensation, discipline, performance, and/or dismissal of specific employees of the public body pursuant to Chapter 5 ILCS 120/2(c)1
- Litigation matters both pending and probable pursuant to Chapter 5 ILCS 120/2(c)11

MOTION: Made by Trustee Mistele, seconded by Trustee McMahon, to adjourn into Executive Session at the hour of 6:34 p.m.

ROLL CALL VOTE: AYES: Trustees Kelly, Mistele, McMahon and O'Connor; NAYS: None; ABSENT: Trustees Baker and Schoenbeck.

MOTION DECLARED CARRIED

SEE APPROPRIATE EXECUTIVE SESSION MINUTES

PRESENTED, READ and APPROVED,

_____, 2010

_____
Village President

Minutes transcribed by Mary Partyka.

MINUTES OF THE REGULAR MEETING OF THE PRESIDENT AND BOARD OF TRUSTEES OF THE VILLAGE OF WILLOWBROOK HELD ON MONDAY, MARCH 22, 2010, AT THE VILLAGE HALL, 7760 QUINCY STREET, IN THE VILLAGE OF WILLOWBROOK, DUPAGE COUNTY, ILLINOIS.

1. CALL TO ORDER

The meeting was called to order at the hour of 7:30 p.m. by Village President Robert Napoli.

2. ROLL CALL

Those present at roll call were Trustees Dennis Baker, Terrence Kelly, Michael Mistele, Paul Schoenbeck, Sandra O'Connor, Timothy McMahon and President Napoli. ABSENT: None. Also present were Village Deputy Clerk Mary Partyka, Village Attorney William Hennessy, Interim Village Administrator Larry Maholland, Interim Village Administrator Megan Pierce, Acting Chief of Police Mark Shelton, Director of Municipal Services Timothy Halik, Director of Finance Sue Stanish and Administrative Intern Garrett Hummel.

A QUORUM WAS DECLARED

3. PLEDGE OF ALLEGIANCE

President Napoli asked everyone to join him in saying the Pledge of Allegiance.

4. OMNIBUS VOTE AGENDA

a. Waive Reading of Minutes (APPROVE)
b. Minutes - Regular Board Meeting - Budget Workshop - March 1, 2010 (APPROVE)
c. Minutes - Regular Board Meeting - March 8, 2010 (APPROVE)
d. Warrants - March 22, 2010 - $116,309.13 (APPROVE)
e. Monthly Financial Report - February 28, 2010 - $14,661,544.91 (ACCEPT)
f. MOTION TO APPROVE - REQUEST FOR WAIVER OF PERMIT FEES - WEST SHRINE CLUB - APRIL 30 THRU MAY 2, 2010 (APPROVE)

President Napoli asked if any Board member wanted to remove any item(s) from the Omnibus Vote Agenda.

Trustee O'Connor requested a correction to Agenda Item No. 4c to change her vote from "Abstention" to "Recused." She also requested that the Attorney Invoices under Agenda Item No. 4d be removed for further discussion.

MOTION; Made by Trustee Baker, seconded by Trustee Mistele, to approve the Omnibus Vote Agenda as amended, exclusive of the Attorney Invoices under Agenda Item No. 4d.

ROLL CALL VOTE: AYES: Trustees Baker, Kelly, Mistele, McMahon, O'Connor and Schoenbeck; NAYS: None; ABSENT: None.

MOTION DECLARED CARRIED

Trustee O'Connor requested that discussion of the Attorney Invoices under Agenda Item No. 4d be deferred to closed session.

NEW BUSINESS

5. PROCLAMATION - RECOGNIZING DR. TIMOTHY T. MCMAHON FOR HIS SERVICE TO THE VILLAGE OF WILLOWBROOK

President Napoli presented a Proclamation to Dr. Timothy T. McMahon and congratulated him on his new employment opportunity and thanked him for his many years of service to the Willowbrook community.

6. VISITOR'S BUSINESS (Public comment is limited to three minutes per person on agenda items only)

None.

7. DELINQUENT WATER BILLS

Director Halik reported to the Village Board that there were three delinquent water bills in the amount of $4,059.94, $378.30 and $457.24, respectively, and requested permission to proceed as per Village policy.

President Napoli noted that the bill in the amount of $4,059.94 was a business versus a residence and he thought the Staff and Attorney should be talking about the issue. It is quite a bit of money and the Village already had a previous problem with one other business that went into bankruptcy.

Trustee Schoenbeck suggested that the Municipal Services Committee look into the possibility of requesting deposits for water accounts. The Board concurred with President Napoli's recommendation to have the Municipal Services Committee review this matter and come back to the Board with a recommendation.

8. ORDINANCE - AN ORDINANCE ABATING THE TAXES HERETOFORE LEVIED FOR THE YEAR 2009 TO PAY THE PRINCIPAL AND INTEREST ON THE $3,540,000 SPECIAL SERVICE AREA NUMBER ONE UNLIMITED AD VALOREM TAX BONDS, SERIES 2007 OF THE VILLAGE OF WILLOWBROOK, DUPAGE COUNTY, ILLINOIS

Director Stanish advised the Board had provided for the issuance of $3,540,000 Special Service Area Number One Ad Valorem Tax Bonds to complete public improvements in the Town Center. In order for DuPage County to assess the proper property tax bill for the parties in the SSA and the TIF a total of $303,817.50 in taxes levied will be abated. This same amount abated will be paid by the property tax owners into the TIF Fund. These same funds will then be transferred from the TIF Fund into the SSA Fund to pay debt service. Director Stanish had met with a representative from The Harlem Irving Companies and had talked with a representative from The LockUp and they both agreed with the abatement calculation.

The Village Board will pass an ordinance such as this one each year until the Plainfield TIF expires in 2013. The approved ordinance will be filed with the DuPage County Clerk.

MOTION: Made by Trustee Schoenbeck, seconded by Trustee McMahon, to pass Ordinance No. 10-O-09.

PREVIOUS ROLL CALL VOTE: AYES: Trustees Baker, Kelly, Mistele, McMahon, O'Connor and Schoenbeck; NAYS: None; ABSENT: None.

MOTION DECLARED CARRIED

9. RESOLUTION - A RESOLUTION AUTHORIZING THE VILLAGE ADMINISTRATOR TO ENTER INTO A CERTAIN AGREEMENT - WOLF & COMPANY LLP - AUDIT SERVICES

Director Stanish informed the Village Board that a Request for Proposal was sent to six accounting firms and a total of five proposals were received. Based on the initial review of qualifications and costs three finalists were selected to be interviewed. At the March 8, 2010 meeting, the Finance Committee concurred with the Staff recommendation to contract with the firm of Wolf & Company LLP for audit services based on experience, size of the firm, fee structure, culture and references.

MOTION: AYES: Trustee Mistele, seconded by Trustee Schoenbeck, to adopt Resolution No. 10-R-10.

PREVIOUS ROLL CALL VOTE: AYES: Trustees Baker, Kelly, Mistele, McMahon, O'Connor and Schoenbeck; NAYS: None; ABSENT: None.

MOTION DECLARED CARRIED

10. DISCUSSION - INFORMATION ON VILLAGE WATER RATE INCREASE

Director Stanish provided the Village Board with updated Village Water Rate information. Staff prepared two water rate models for a 10-year period:

Option 1 - Pay as you go financing for the Village's water towers. In eight years funds will be on hand to paint the towers.

Option 1-A - The Village will try and keep water rate increases at a minimum to cover the costs of increased purchased water costs from the DuPage Water Commission (DWC) and routine maintenance of the system. In eight years the Village will then issue bonds to fund the painting of the water towers.

Director Stanish advised that the model would be updated each year to reflect changes in the costs to purchase water from the DWC and any unexpected changes necessary to maintain the Village's water system. The models assume an 8.5% increase in purchased water costs. The most recent information from the DWC indicates a 17% increase effective May 1.

Trustee Schoenbeck suggested that the Finance/Administration Committee and Municipal Services Committee review this information and make a recommendation to the Board.

Director Stanish thought a joint meeting of both Committees can be held on April 12 and then they can come back to the Board with a recommendation at the same meeting.

President Napoli distributed a copy to the Board of a breakdown of what the other communities are doing for the water rates.

PRIOR BUSINESS

11. COMMITTEE REPORTS

Trustee McMahon had no report.

Trustee O'Connor had no report.

Trustee Schoenbeck had no report.

Trustee Baker had no report.

Trustee Kelly had no report.

Trustee Mistele had no report.

12. ATTORNEY'S REPORT

Attorney Hennessy had no report.

13. CLERK'S REPORT

Deputy Clerk Partyka had no report.

14. ADMINISTRATOR'S REPORT

Administrator Pierce asked the Staff to provide the following updates:

a) Update - FY 10-11 General Fund Budget

Director Stanish presented the Financial Summary FY2010-11 that reflected the changes made to the General Fund that were discussed at the Board's March 1 workshop. The current General Fund Surplus is at $161,652 with 177 days operating expenses, which does not include salary increases.

b) Update - St. Baldricks' Event at Kerry Piper

Chief Shelton reported that the St. Baldricks event was very successful and raised close to $60,000. The event went off without any problems.

President Napoli asked that the Village Board be informed prior to the next time the event will be held.

c) Update - Maintenance Worker Hiring Announcement

Director Halik advised the Village Board that the notice for the Maintenance Worker position was posted and 268 applications were received. Staff interviewed thirteen of the applicants and after totaling the scores for the applicants, an offer of employment was made to Anthony Witt, who will start as the fulltime Maintenance Worker on March 29.

15. PRESIDENT'S REPORT

President Napoli had no report.

16. EXECUTIVE SESSION

MOTION: Made by Trustee Schoenbeck, seconded by Trustee McMahon, to recess into Executive Session at the hour of 8:05 p.m. to discuss:

- Personnel Matters embracing the possible Appointment, Employment, Compensation, Discipline, Performance and/or Dismissal of Specific Employees of the Public Body pursuant to 5 ILCS 120/2(c)(1)
- Agenda Item No. 4d, Attorney Invoices

PREVIOUS ROLL CALL VOTE: AYES: Trustees Baker, Kelly, Mistele, Schoenbeck, O'Connor and McMahon; NAYS: None; ABSENT: None.

MOTION DECLARED CARRIED

SEE APPROPRIATE EXECUTIVE SESSION MINUTES

The Village Board reconvened the regular meeting at the hour of 8:58 p.m.

17. ADJOURNMENT

MOTION: Made by Trustee McMahon, seconded by Trustee Schoenbeck, to adjourn the regular meeting at the hour of 8:59 p.m.

PREVIOUS ROLL CALL VOTE: AYES: Trustees Baker, Kelly, Mistele, Schoenbeck, O'Connor and McMahon; NAYS: None; ABSENT: None.

MOTION DECLARED CARRIED

PRESENTED, READ and APPROVED,

_____, 2010

_____
Village President

Minutes transcribed by Mary Partyka.

WARRANTS

April 12, 2010

GENERAL CORPORATE FUND	----------	$135,961.51
WATER FUND	----------	8,280.32
HOTEL/MOTEL TAX FUND	----------	11,500.00
POLICE PENSION FUND	----------	479.19
TOTAL WARRANTS	----------	$156,221.02

Sue Stanish

Sue Stanish, Director of Finance

APPROVED:

Robert A. Napoli, Village President

DESCRIPTION		ACCOUNT NUMBER	AMOUNT
ACE STORE NO. 11 (17)	04/13 CK# 74926		$35.44
408636/4 MAINTENANCE SUPPLIES 01-615-331		01-20-570-331	2.99
408638/4 MAINTENANCE SUPPLIES 01-615-331		01-20-570-331	12.99
408642/4 BUILDING MAINTENANCE SUPPLIES 01-405-351		01-10-466-351	5.99
408643/4 BUILDING MAINTENANCE SUPPLIES 01-405-351		01-10-466-351	12.98
408645/4 BUILDING MAINTENANCE SUPPLIES 01-405-351		01-10-466-351	-5.50
408657/4 BUILDING MAINTENANCE SUPPLIES 01-405-351		01-10-466-351	5.99
AFLAC (46)	04/13 CK# 74927		$42.00
40814ER/MAR EMP DED PAY - AFLAC FEE 01-210-221		01-210-221	42.00
AL WARREN OIL CO (2205)	04/13 CK# 74928		$6,413.64
1582355 GASOLINE INVENTORY 01-190-126		01-190-126	3,330.86
1584318 GASOLINE INVENTORY 01-190-126		01-190-126	3,082.78
AMERICAN FIRST AID SERVICE INC (77)	04/13 CK# 74929		$114.20
93667 OPERATING EQUIPMENT 01-451-401		01-30-630-401	52.65
93668 BUILDING MAINTENANCE SUPPLIES 01-405-351		01-10-466-351	61.55
AMERICAN SOCIETY OF COMPOSERS, AUTHORS (2320)	04/13 CK# 74930		$305.00
LICENSE AGRMNT FEES DUES SUBSCRIPTIONS 01-420-307		01-10-455-307	305.00
AT & T LONG DISTANCE (66)	04/13 CK# 74932		$97.69
854192715/MAR PHONE - TELEPHONES 01-420-201		01-10-455-201	97.69
AT & T (67)	04/13 CK# 74933		$1,852.52
630 R26-5644 PHONE - TELEPHONES 01-420-201		01-10-455-201	876.98
630 R26-5644 PHONE - TELEPHONES 01-451-201		01-30-630-201	876.98
6307349661/MAR TELEPHONES 01-501-201		01-35-710-201	98.56
BARNACLE JOHN (191)	04/13 CK# 74934		$353.56
FBI UNIFORMS OPERATING EQUIPMENT 01-451-401		01-30-630-401	49.16
FBI-NA AIR FARE SCHOOLS-CONFERENCE TRAVEL 01-451-304		01-30-630-304	304.40
BELLEVILLE SHOE MANUFACTURING CO (2235)	04/13 CK# 74935		$124.80
20043226 UNIFORMS 01-501-345		01-35-710-345	124.80
BEST QUALITY CLEANING INC (194)	04/13 CK# 74936		$1,575.00
37146/MAR 10 MAINTENANCE - BUILDING 01-405-228		01-10-466-228	1,575.00
BILL ROBERTSON (1735)	04/13 CK# 74937		$285.00
OVERPAYMENT SUMMER RECREATION FEES 01-310-815		01-310-815	285.00
CAR REFLECTIONS (296)	04/13 CK# 74938		$195.00
11701 MAINTENANCE - VEHICLES 01-451-409		01-30-630-409	195.00
JOSE CHAVEZ-JIMENEZ (322)	04/13 CK# 74939		$750.00
10 UNIFORMS UNIFORMS 01-451-345		01-30-630-345	750.00
CHRISTOPHER B. BURKE (333)	04/13 CK# 74940		$14,667.44
93027 PRINTING & PUBLISH 01-420-302		01-10-455-302	111.68
93028 PLAN REVIEW - ENGINEERING 01-15-520-254		01-15-520-254	440.00
93029 REIMB.		01-40-820-247	5,471.58
93030 PRINTING & PUBLISHING 01-15-510-302		01-15-510-302	761.80
93031 PLAN REVIEW - DRAINAGE ENGINEER 01-555-259		01-40-820-259	292.25
93032 REIMB.		01-40-820-259	309.50
93033 REIMB.		01-40-820-259	110.00
93034 FEES - ENGINEERING 01-505-245		01-35-720-245	5,940.13
93035 REIMB.		01-35-720-247	471.50
93045 FEES - ENGINEERING 01-505-245		01-35-720-245	759.00

DESCRIPTION		ACCOUNT NUMBER	AMOUNT
COMCAST CABLE (365)	04/13 CK# 74941		$187.91
879820113006504 E.D.P. SOFTWARE 01-410-212		01-10-460-212	113.01
879820113021135 EQUIPMENT MAINTENANCE 01-503-263		01-35-715-263	74.90
COMMONWEALTH EDISON (370)	04/13 CK# 74942		$1,571.51
1844110006/MAR ENERGY - STREET LIGHT 01-530-207		01-35-745-207	892.45
4215105154/MAR ENERGY - STREET LIGHT 01-530-207		01-35-745-207	604.86
4403140110/MAR ENERGY - STREET LIGHT 01-530-207		01-35-745-207	74.20
COMMUNICATIONS DIRECT, INC. (371)	04/13 CK# 74943		$630.00
IN103071 MAINTENANCE - VEHICLES 01-451-409		01-30-630-409	630.00
CONCRETE CLINIC (376)	04/13 CK# 74944		$23.96
191158 STORM WATER IMPROVEMENTS MAT 01-535-381		01-35-750-381	23.96
COOK COUNTY CLERK (396)	04/13 CK# 74945		$10.00
N VOLEK FEES-DUES-SUBSCRIPTIONS 01-451-307		01-30-630-307	10.00
DD INDUSTRIES INC (2246)	04/13 CK# 74946		$136.68
8023 OPERATING EQUIPMENT 01-451-401		01-30-630-401	136.68
DELTA DENTAL PLAN OF ILLINOIS (468)	04/13 CK# 74947		$3,275.94
APRIL 2010 EMP DED PAY-INS 01-210-204		01-210-204	586.14
APRIL 2010 EMPLOYEE BENEFIT - MEDICAL INSURANC		01-10-455-141	33.74
APRIL 2010 EMPLOYEE BENEFITS - MEDICAL 01-15-510-141		01-15-510-141	77.55
APRIL 2010 EMPLOYEE BENEFIT - MEDICAL INS 01-25-610-141		01-25-610-141	121.36
APRIL 2010 EMPLOYEE BENEFIT - MEDICAL INSURANC		01-30-630-141	2,231.30
APRIL 2010 EMPLOYEE BENEFITS - MEDICAL 01-501-141		01-35-710-141	94.42
APRIL 2010 EMPLOYEE BENEFITS - MEDICAL 01-551-141		01-40-810-141	131.43
DUPAGE MATERIALS COMPANY (526)	04/13 CK# 74948		$111.30
62708MB STREET & ROW MAINTENANCE 01-535-328		01-35-750-328	111.30
DUPAGE COUNTY E.T.S.B. 911 (513)	04/13 CK# 74950		$468.37
60/FEB 10 PHONE - TELEPHONES 01-451-201		01-30-630-201	468.37
FEDERAL EXPRESS CORP. (592)	04/13 CK# 74952		$66.40
7-032-76096 POSTAGE & METER RENT 01-25-610-311		01-25-610-311	31.84
7-032-76096 POSTAGE & METER RENT 01-551-311		01-40-810-311	34.56
GORDON FLESCH (695)	04/13 CK# 74953		$179.25
ORD664 COPY SERVICE 01-420-315		01-10-455-315	179.25
W.W. GRAINGER (1999)	04/13 CK# 74954		$584.66
9204250022 ROAD SIGNS 01-540-333		01-35-755-333	13.65
9211031829 BUILDING MAINTENANCE SUPPLIES 01-405-351		01-10-466-351	90.55
9211897674 BUILDING MAINTENANCE SUPPLIES 01-405-351		01-10-466-351	11.22
9211897682 MAINTENANCE SUPPLIES 01-615-331		01-20-570-331	83.56
9211897682 MAINTENANCE - VEHICLES 01-520-409		01-35-735-409	83.56
9212726518 STREET & ROW MAINTENANCE 01-535-328		01-35-750-328	24.75
9213843403 BUILDING MAINTENANCE SUPPLIES 01-405-351		01-10-466-351	15.48
9214162928 OPERATING EQUIPMENT 01-540-401		01-35-755-401	246.00
9214162936 BUILDING MAINTENANCE SUPPLIES 01-405-351		01-10-466-351	15.89
HAHN, JIM (749)	04/13 CK# 74955		$55.07
445 STONEGAT BX STREET & ROW MAINTENANCE 01-535-328		01-35-750-328	55.07
HALA NABULSI (2084)	04/13 CK# 74956		$12.00
BABYSITTER CLNC WINTER RECREATION FEES 01-310-816		01-310-816	12.00
HERTZ VEHICLES (1862)	04/13 CK# 74957		$100.00
35242754 RED LIGHT FINES 01-310-503		01-310-503	100.00

DESCRIPTION		ACCOUNT NUMBER	AMOUNT
HIGHWAY TECHNOLOGIES (780)	04/13 CK# 74958		$828.00
370013-001 REIMB. EXP. - OTHER 01-540-283		01-35-755-283	828.00
HOLIDAY INN WILLOWBROOK (804)	04/13 CK# 74959		$835.20
35650 OPERATING EQUIPMENT 01-451-401		01-30-630-401	835.20
HOME DEPOT COMMERCIAL (808)	04/13 CK# 74960		$232.41
8034384 STREET & ROW MAINTENANCE 01-535-328		01-35-750-328	224.70
8034404 STREET & ROW MAINTENANCE 01-535-328		01-35-750-328	7.71
I.R.M.A. (966)	04/13 CK# 74961		$431.53
FEB SELF INS - DEDUCTIBLE 01-460-273		01-30-645-273	302.71
FEB MAINTENANCE - GAS TANKS AND PUMPS 01-510-412		01-35-725-412	1,634.00
JAN SELF INS - DEDUCTIBLE 01-460-273		01-30-645-273	944.82
NOV SELF INS - DEDUCTIBLE 01-460-273		01-30-645-273	-2,450.00
ILLINOIS SHOTOKAN KARATE (909)	04/13 CK# 74962		$1,607.40
473/FALL 09 FALL PROGRAM MATERIALS & SERVICES 01-622-118		01-20-580-118	1,607.40
INTERGOVERMENTAL PERSONNEL (934)	04/13 CK# 74963		$37,029.61
APRIL 2010 EMP DED PAY-INS 01-210-204		01-210-204	6,200.19
APRIL 2010 EMPLOYEE BENEFIT - MEDICAL INSURANC		01-10-455-141	493.93
APRIL 2010 EMPLOYEE BENEFITS - MEDICAL 01-15-510-141		01-15-510-141	1,028.04
APRIL 2010 EMPLOYEE BENEFIT - MEDICAL INS 01-25-610-141		01-25-610-141	1,200.11
APRIL 2010 EMPLOYEE BENEFIT - MEDICAL INSURANC		01-30-630-141	25,560.67
APRIL 2010 EMPLOYEE BENEFITS - MEDICAL 01-501-141		01-35-710-141	816.40
APRIL 2010 EMPLOYEE BENEFITS - MEDICAL 01-551-141		01-40-810-141	1,730.27
JANET PODCZERWINSKI (2084)	04/13 CK# 74964		$12.00
BABYSTTR CLNC WINTER RECREATION FEES 01-310-816		01-310-816	12.00
JEFFREY BERTI (1862)	04/13 CK# 74965		$25.00
WL 71081 TRAFFIC FINES 01-310-502		01-310-502	25.00
KIPP'S LAWNMOWER SALES & SERVICE (1062)	04/13 CK# 74966		$138.43
376930 MAINTENANCE SUPPLIES 01-615-331		01-20-570-331	138.43
KRAMER TREE SPECIALISTS INC. (1080)	04/13 CK# 74968		$195.00
225462 TREE MAINTENANCE 01-535-338		01-35-750-338	195.00
LAGRANGE CAMERA & VIDEO (1098)	04/13 CK# 74969		$209.75
28453 OPERATING EQUIPMENT 01-451-401		01-30-630-401	209.75
METRO REPORTING SERVICE LTD. (1246)	04/13 CK# 74970		$567.90
19375 FEES - COURT REPORTER 01-15-520-246		01-15-520-246	567.90
MIDWEST LASER SPECIALISTS, INC (1276)	04/13 CK# 74971		$975.94
1055112 OPERATING SUPPLIES 01-451-331		01-30-630-331	96.99
1055242 OPERATING SUPPLIES 01-451-331		01-30-630-331	878.95
ROBERT NAPOLI (1331)	04/13 CK# 74972		$201.06
9/24/09-3/5/10 SCHOOLS-CONFERENCE TRAVEL 01-05-410-304		01-05-410-304	201.06
NEOPOST LEASING (1358)	04/13 CK# 74973		$347.88
N1479325 POSTAGE & METER RENT 01-420-311		01-10-455-311	347.88
NICOR GAS (1370)	04/13 CK# 74974		$604.85
95476110002/MAR NICOR GAS 01-405-235		01-10-466-235	604.85
ORKIN EXTERMINATING (1439)	04/13 CK# 74975		$62.48
D2604360/APR 10 MAINTENANCE - BUILDING 01-405-228		01-10-466-228	62.48
PACIFIC TELEMANAGEMENT SERVICES (2197)	04/13 CK# 74976		$78.00
182241/APR PHONE - TELEPHONES 01-420-201		01-10-455-201	78.00

DESCRIPTION		ACCOUNT NUMBER	AMOUNT
PAK MAIL CENTER (1459)	04/13 CK# 74977		$13.59
47168 OPERATING EQUIPMENT 01-451-401		01-30-630-401	13.59
PCS INTERNATIONAL (2201)	04/13 CK# 74978		$6,053.14
123817 CONSULTING SERVICES 01-457-306		01-30-640-306	919.63
123841 CONSULTING SERVICES 01-457-306		01-30-640-306	100.00
123852 E.D.P. SOFTWARE 01-25-615-212		01-25-615-212	269.51
SILVER TEK-PAK CONSULTING SERVICES 01-410-306		01-10-460-306	764.00
SILVER TEK-PAK CONSULTING SERVICES 01-15-515-306		01-15-515-306	2,000.00
SILVER TEK-PAK CONSULTING SERVICES 01-503-306		01-35-715-306	1,000.00
SILVER TEK-PAK CONSULTING SERVICES 01-557-306		01-40-815-306	1,000.00
PETTY CASH C/O SUE STANISH (1492)	04/13 CK# 74980		$131.57
3/31/10 CASH - OVER OR SHORT 01-420-505		01-10-455-505	1.69
3/31/10 WINTER PROGRAM MATERIALS & SERVICES		01-20-585-121	56.20
3/31/10 GAS-OIL-WASH-MILEAGE 01-451-303		01-30-630-303	15.54
3/31/10 SCHOOLS-CONFERENCE TRAVEL 01-451-304		01-30-630-304	58.14
PRO-TEK LOCK AND SAFE (1547)	04/13 CK# 74981		$112.00
75607 MAINTENANCE - BUILDING 01-405-228		01-10-466-228	24.00
75611 MAINTENANCE - BUILDING 01-405-228		01-10-466-228	88.00
PUBLIC SAFETY DIRECT INC (2309)	04/13 CK# 74982		$232.99
20893 OPERATING EQUIPMENT 01-451-401		01-30-630-401	47.50
20894 OPERATING EQUIPMENT 01-451-401		01-30-630-401	56.99
20915 MAINTENANCE - VEHICLES 01-451-409		01-30-630-409	47.50
20920 MAINTENANCE - VEHICLES 01-451-409		01-30-630-409	81.00
QUALITY SMALL ENGIN SERVICE (1565)	04/13 CK# 74983		$168.15
2300783 MAINTENANCE - EQUIPMENT 01-520-411		01-35-735-411	168.15
RADIO COMMUNICATIONS & BYOND INC (1572)	04/13 CK# 74984		$199.00
10798 OPERATING EQUIPMENT 01-451-401		01-30-630-401	199.00
SECRETARY OF STATE (1692)	04/13 CK# 74985		$18.00
KIRK TRAILER MAINTENANCE - VEHICLES 01-520-409		01-35-735-409	18.00
SIKICH LLP (1722)	04/13 CK# 74987		$15,162.75
112339 CONSULTING FEES		01-10-471-253	13,264.75
112342/ORG CONSULTING FEES		01-10-471-253	235.50
112637/HR RPT CONSULTING FEES		01-10-471-253	1,662.50
SOUTHWEST UNITED FIRE DISTRICTS (1749)	04/13 CK# 74988		$741.36
09-10-1262 MAINTENANCE - EQUIPMENT 01-525-411		01-35-740-411	741.36
SOUTHWEST CENTRAL DISPATCH (1751)	04/13 CK# 74989		$21,645.66
APRIL 2010 RADIO DISPATCHING 01-483-235		01-30-675-235	21,645.66
STAPLES (1767)	04/13 CK# 74990		$150.90
8015023915 OFFICE SUPPLIES 01-420-301		01-10-455-301	150.90
STONE WHEEL INC (1780)	04/13 CK# 74991		$5.34
01 529024 MAINTENANCE - VEHICLES 01-451-409		01-30-630-409	8.89
CM01 094217 MAINTENANCE - VEHICLES 01-451-409		01-30-630-409	-3.55
MICHELLE STRUGALA (1786)	04/13 CK# 74992		$86.38
10 UNIFORMS UNIFORMS 01-451-345		01-30-630-345	86.38
THOMPSON ELEV. INSPECT. SERVICE (1873)	04/13 CK# 74994		$200.00
10-0849 ELEVATOR INSPECTION 01-565-117		01-40-830-117	200.00
UNIFIRST (1926)	04/13 CK# 74996		$180.05
0610499598 MAINTENANCE - BUILDING 01-405-228		01-10-466-228	180.05

DESCRIPTION		ACCOUNT NUMBER	AMOUNT
UNITED STATE POSTAL SERVICE (1946)	04/13 CK# 74997		$2,500.00
DEPOSIT PREPAID POSTAGE 01-190-102		01-190-102	2,500.00
VERIZON WIRELESS (1972)	04/13 CK# 74998		$842.69
2375697986 PHONE - TELEPHONES 01-05-410-201		01-05-410-201	36.92
2375697986 PHONE - TELEPHONES 01-420-201		01-10-455-201	-11.92
2375697986 PHONE - TELEPHONES 01-25-610-201		01-25-610-201	49.58
2375697986 PHONE - TELEPHONES 01-451-201		01-30-630-201	616.51
2375697986 TELEPHONES 01-501-201		01-35-710-201	90.63
2375697986 TELEPHONES 01-551-201		01-40-810-201	60.97
VILLA PARK MATERIAL CO. INC (1974)	04/13 CK# 74999		$1,761.90
86262 ST & ROW MAINTENANCE OTHER 01-540-328		01-35-755-328	593.50
86307 ST & ROW MAINTENANCE OTHER 01-540-328		01-35-755-328	394.00
86308 ST & ROW MAINTENANCE OTHER 01-540-328		01-35-755-328	717.40
86327 ST & ROW MAINTENANCE OTHER 01-540-328		01-35-755-328	57.00
NICHOLAS VOLEK (2254)	04/13 CK# 75000		$67.00
10 UNFRMS UNIFORMS 01-451-345		01-30-630-345	67.00
WAREHOUSE DIRECT (2002)	04/13 CK# 75001		$328.73
671495-0 OFFICE SUPPLIES 01-451-301		01-30-630-301	328.73
WESTERN REMAC INC (2036)	04/13 CK# 75002		$230.80
35824 ROAD SIGNS 01-540-333		01-35-755-333	212.40
35825 ROAD SIGNS 01-540-333		01-35-755-333	18.40
WESTOWN AUTO SUPPLY COMPANY (2026)	04/13 CK# 75003		$26.81
27821 MAINTENANCE - VEHICLES 01-520-409		01-35-735-409	4.86
28038 OPERATING SUPPLIES & EQUIPMENT 01-503-401		01-35-715-401	21.95
LAW OFFICES OF WILLIAM J. HENNESSY (2277)	04/13 CK# 75007		$5,225.00
REISSUE CK FEB FEES - VILLAGE ATTORNEY 01-425-239		01-10-470-239	5,225.00
THE YOGA TEACHERS' GROUP INC (2109)	04/13 CK# 75005		$1,085.00
2/15-3/25/10 WINTER PROGRAM MATERIALS & SERVICES		01-20-585-121	1,085.00
ZEP MANUFACTURING COMPANY (2115)	04/13 CK# 75006		$185.92
30415997 OPERATING EQUIPMENT 01-451-401		01-30-630-401	185.92
TOTAL GENERAL CORPORATE FUND			$135,961.51

DESCRIPTION		ACCOUNT NUMBER	AMOUNT
AT & T MOBILITY (64)	04/13 CK# 74931		$115.98
826930710/MAR PHONE - TELEPHONES 02-401-201		02-50-401-201	115.98
AT & T (67)	04/13 CK# 74933		$493.57
630323-0337/MAR PHONE - TELEPHONES 02-401-201		02-50-401-201	493.57
DELTA DENTAL PLAN OF ILLINOIS (468)	04/13 CK# 74947		$94.42
APRIL 2010 EMPLOYEE BENEFITS - MEDICAL		02-50-401-141	94.42
ENVIRO TEST INC (555)	04/13 CK# 74951		$87.50
10-126825 SAMPLING ANALYSIS 02-420-362		02-50-420-362	87.50
INTERGOVERMENTAL PERSONNEL (934)	04/13 CK# 74963		$867.61
APRIL 2010 EMPLOYEE BENEFITS - MEDICAL		02-50-401-141	867.61
PCS INTERNATIONAL (2201)	04/13 CK# 74978		$1,486.00
SILVER TEK-PAK EDP EQUIPMENT MAINTENANCE 02-417-263		02-50-417-263	1,486.00
PDC LABORATORIES INC (1477)	04/13 CK# 74979		$150.00
658971S SAMPLING ANALYSIS 02-420-362		02-50-420-362	150.00
SIEBERT E D TRUCKING (1715)	04/13 CK# 74986		$857.80
E 8396 WATER DISTRIBUTION REPAIR-MAINTENAN		02-50-430-277	857.80
SUNSET SEWER & WATER (2276)	04/13 CK# 74993		$3,805.53
2010-039 WATER DISTRIBUTION REPAIR-MAINTENAN		02-50-430-277	736.03
2010-045 WATER DISTRIBUTION REPAIR-MAINTENAN		02-50-430-277	1,833.00
2010-046 WATER DISTRIBUTION REPAIR-MAINTENAN		02-50-430-277	404.00
2010-048 WATER DISTRIBUTION REPAIR-MAINTENAN		02-50-430-277	832.50
U.S. POSTMASTER (1948)	04/13 CK# 74995		$185.00
PERMIT #43 POSTAGE & METER RENT 02-401-311		02-50-401-311	185.00
VERIZON WIRELESS (1972)	04/13 CK# 74998		$136.91
2375697986 PHONE - TELEPHONES 02-401-201		02-50-401-201	81.50
2375697987 PHONE - TELEPHONES 02-401-201		02-50-401-201	55.41
TOTAL WATER FUND			$8,280.32

DESCRIPTION		ACCOUNT NUMBER	AMOUNT
DUPAGE CONVENTION (494)	04/13 CK# 74949		$9,000.00
7178 ADVERTISING 03-435-317		03-53-435-317	4,000.00
7179 ADVERTISING 03-435-317		03-53-435-317	5,000.00
WLBK BURR RIDGE CHAMBER OF COM (2053)	04/13 CK# 75004		$2,500.00
EXPO 2010 SPECIAL PROMOTIONAL EVENTS 03-436-379		03-53-436-379	2,500.00
TOTAL HOTEL/MOTEL TAX FUND			$11,500.00

DESCRIPTION		ACCOUNT NUMBER	AMOUNT
TIMOTHY KOBLER (1072)	04/13 CK# 74967		$479.19
IPPFA CONF MEETINGS, TRAVEL, CONFERENCES 07-401-304		07-62-401-304	479.19
TOTAL POLICE PENSION FUND			$479.19

VILLAGE OF WILLOWBROOK
BILLS PAID REPORT FOR APRIL, 2010
SUMMARY ALL FUNDS

BANK ACCOUNT	DESCRIPTION	AMOUNT	
01-110-105	GENERAL CORPORATE FUND-CHECKING - 0010330283	135,961.51	*
02-110-105	WATER FUND-CHECKING 0010330283	8,280.32	*
03-110-105	HOTEL/MOTEL TAX FUND-CHECKING 0010330283	11,500.00	*
07-110-105	POLICE PENSION FUND-CHECKING 0010330283	479.19	*
	TOTAL ALL FUNDS	156,221.02	**

VILLAGE OF WILLOWBROOK

MONTHLY FINANCIAL REPORT

RUN: 04/05/10 9:01AM

SUMMARY OF FUNDS AS OF MARCH 31, 2010

FUND DESCRIPTION	DETAIL	BALANCE
GENERAL CORPORATE FUND		$2,932,690.81
AGENCY CERTIFICATES	$600,000.00	
MONEY MARKET	2,113,771.96	
MARKET VALUE	179,049.87	
PETTY CASH	950.00	
SAVINGS	38,918.98	
TOTAL	$2,932,690.81	
WATER FUND		$465,685.05
MONEY MARKET	$465,685.05	
HOTEL/MOTEL TAX FUND		$15,766.89
MONEY MARKET	$15,766.89	
MOTOR FUEL TAX FUND		$81,948.14
MONEY MARKET	$81,948.14	
T I F SPECIAL REVENUE FUND		$8,130.12
MONEY MARKET	$8,130.12	
SSA ONE BOND & INTEREST FUND		$6,937.85
MONEY MARKET	$6,937.85	
POLICE PENSION FUND		$10,771,636.52
AGENCY CERTIFICATES	$5,072,728.84	
CERTIFICATE OF DEPOSIT	100,000.00	
MUNICIPAL BONDS	616,219.80	
MUTUAL FUNDS	4,888,014.37	
MONEY MARKET	334,630.49	
MARKET VALUE	-607,137.28	
TREASURY NOTES	367,180.30	
TOTAL	$10,771,636.52	
SSA ONE PROJECT FUND		$51,404.69
MONEY MARKET	$51,404.69	
WATER CAPITAL IMPROVEMENTS FUND		$139,513.04
MONEY MARKET	$139,513.04	
CAPITAL PROJECT FUND		$461,669.60
MONEY MARKET	$461,669.60	
2008 BOND FUND		$0.00
TOTAL MONIES		$14,935,382.71

RESPECTFULLY SUBMITTED THIS 31ST DAY OF MARCH, 2010

Sue Stanish

SUE STANISH, DIRECTOR OF FINANCE

ROBERT A. NAPOLI, VILLAGE PRESIDENT

VILLAGE OF WILLOWBROOK

MONTHLY FINANCIAL REPORT

DETAILED SUMMARY OF FUNDS AS OF MARCH 31, 2010

FUND DESCRIPTION	DETAIL	BALANCE
GENERAL CORPORATE FUND		$2,932,779.05
AS PER SUMMARY, MARCH, 2010	$2,932,690.81	
DUE TO/FROM WATER FUND	343.93	
DUE TO/FROM MFT FUND	-255.69	
	$2,932,779.05	
WATER FUND		$455,158.12
AS PER SUMMARY, MARCH, 2010	$465,685.05	
DUE TO/FROM GENERAL FUND	-343.93	
DUE TO/FROM WATER CAPITAL	-10,183.00	
	$455,158.12	
HOTEL/MOTEL TAX FUND		$15,766.89
AS PER SUMMARY, MARCH, 2010	$15,766.89	
MOTOR FUEL TAX FUND		$82,203.83
AS PER SUMMARY, MARCH, 2010	$81,948.14	
DUE TO/FROM GENERAL FUND	255.69	
	$82,203.83	
T I F SPECIAL REVENUE FUND		$8,130.12
AS PER SUMMARY, MARCH, 2010	$8,130.12	
SSA ONE BOND & INTEREST FUND		$6,937.85
AS PER SUMMARY, MARCH, 2010	$6,937.85	
POLICE PENSION FUND		$10,771,636.52
AS PER SUMMARY, MARCH, 2010	$10,771,636.52	
SSA ONE PROJECT FUND		$51,404.69
AS PER SUMMARY, MARCH, 2010	$51,404.69	
WATER CAPITAL IMPROVEMENTS FUND		$149,696.04
AS PER SUMMARY, MARCH, 2010	$139,513.04	
DUE TO/FROM WATER FUND	10,183.00	
	$149,696.04	
CAPITAL PROJECT FUND		$461,669.60
AS PER SUMMARY, MARCH, 2010	$461,669.60	
TOTAL MONIES		$14,935,382.71

$359,151.58 INTEREST POSTED THIS FISCAL YEAR

ACCOUNT NUMBER	ID. NO.	FINANCIAL INSTITUTION	CERTIFICATE NUMBER	TERM (DAYS)	ANNUAL YIELD	PRINCIPAL	TYPE	MATURE DATE
		GENERAL CORPORATE FUND						
01-120-154		IMET	POOLED INVEST		0.63%	600,000.00	AC	N/A
			TOTAL AGENCY CERTIFICATES			$600,000.00		
01-110-325		COMMUNITY BANK OF WB	MONEY MARKET		0.85%	8,126.65	MM	N/A
01-110-323		COMMUNITY BANK OF WB	MONEY MARKET		1.24%	1,929,936.84	MM	N/A
01-110-330		COMMUNITY BANK OF WB	MONEY MARKET		0.27%	8,260.07	MM	N/A
01-110-380		COMMUNITY BANK OF WB	MONEY MARKET		0.85%	153,946.36	MM	N/A
01-110-322		ILLINOIS FUNDS	MONEY MARKET		0.97%	13,502.04	MM	N/A
			TOTAL MONEY MARKET			$2,113,771.96		
01-120-900		IMET MARKET VALUE CONTRA	MARKET VALUE			179,049.87	MV	N/A
			TOTAL MARKET VALUE			$179,049.87		
01-110-911		VILLAGE OF WILLOWBROOK	PETTY CASH			950.00	PC	N/A
			TOTAL PETTY CASH			$950.00		
01-110-257		COMMUNITY BANK OF WB	SAVINGS			38,918.98	SV	N/A
			TOTAL SAVINGS			$38,918.98		
			TOTAL GENERAL CORPORATE FUND			$2,932,690.81		
			AVERAGE ANNUAL YIELD			1.08 %		
		WATER FUND						
02-110-209		COMMUNITY BANK OF WB	MONEY MARKET		0.27%	461,778.33	MM	N/A
02-110-322		ILLINOIS FUNDS	MONEY MARKET		0.97%	3,906.72	MM	N/A
			TOTAL MONEY MARKET			$465,685.05		
			TOTAL WATER FUND			$465,685.05		
			AVERAGE ANNUAL YIELD			0.28 %		
		HOTEL/MOTEL TAX FUND						
03-110-322		ILLINOIS FUNDS	MONEY MARKET		0.97%	15,766.89	MM	N/A
			TOTAL MONEY MARKET			$15,766.89		
			TOTAL HOTEL/MOTEL TAX FUND			$15,766.89		
			AVERAGE ANNUAL YIELD			0.97 %		
		MOTOR FUEL TAX FUND						
04-110-322		ILLINOIS FUNDS	MONEY MARKET		0.97%	81,948.14	MM	N/A
			TOTAL MONEY MARKET			$81,948.14		
			TOTAL MOTOR FUEL TAX FUND			$81,948.14		
			AVERAGE ANNUAL YIELD			0.97 %		

ACCOUNT NUMBER	ID. NO.	FINANCIAL INSTITUTION	CERTIFICATE NUMBER	TERM (DAYS)	ANNUAL YIELD	PRINCIPAL	TYPE	MATURE DATE
		T I F SPECIAL REVENUE FUND						
05-110-322		ILLINOIS FUNDS	MONEY MARKET		0.97%	8,130.12	MM	N/A
			TOTAL MONEY MARKET			$8,130.12		
			TOTAL T I F SPECIAL REVENUE FUND			$8,130.12		
			AVERAGE ANNUAL YIELD			0.97 %		
		SSA ONE BOND & INTEREST FUND						
06-110-323		IMET	MONEY MARKET		0.56%	6,937.85	MM	N/A
			TOTAL MONEY MARKET			$6,937.85		
			TOTAL SSA ONE BOND & INTEREST FUND			$6,937.85		
			AVERAGE ANNUAL YIELD			0.56 %		
		POLICE PENSION FUND						
07-120-346		MBFINANCIAL BANK	FHLB		3.37%	100,245.00	AC	05/14/2010
07-120-344		MBFINANCIAL BANK	FHLB		4.25%	75,280.75	AC	11/15/2010
07-120-334		MBFINANCIAL BANK	FHLB		4.37%	200,000.00	AC	12/20/2010
07-120-388		MBFINANCIAL BANK	FHLB		4.87%	57,125.20	AC	03/11/2011
07-120-326		MBFINANCIAL BANK	FHLMC		6.00%	200,116.00	AC	06/15/2011
07-120-355		MBFINANCIAL BANK	FFCB		4.25%	63,040.67	AC	07/11/2011
07-120-294		MBFINANCIAL BANK	FHLB		4.88%	61,874.40	AC	11/15/2011
07-120-330		MBFINANCIAL BANK	FNMA		5.37%	68,598.60	AC	11/15/2011
07-120-342		MBFINANCIAL BANK	FHLB		4.88%	139,359.15	AC	11/15/2011
07-120-406		MBFINANCIAL BANK	SOTHERN ILL UNI		2.90%	25,102.50	AC	04/01/2012
07-120-411		MBFINANCIAL BANK	US TREAS INFL I		2.00%	130,325.05	AC	04/15/2012
07-120-418		MBFINANCIAL BANK	KANE COUNTY BLI		2.00%	49,999.50	AC	12/15/2012
07-120-396		MBFINANCIAL BANK	FNMA		4.38%	99,816.00	AC	07/17/2013
07-120-393		MBFINANCIAL BANK	FHLMC		4.50%	51,782.00	AC	04/02/2014
07-120-416		MBFINANCIAL BANK	CRYSTAL LAKE BI		4.65%	25,000.00	AC	05/15/2014
07-120-407		MBFINANCIAL BANK	FHLB		3.40%	152,676.00	AC	06/17/2014
07-120-378		MBFINANCIAL BANK	FHLB		5.80%	75,213.75	AC	08/13/2014
07-120-380		MBFINANCIAL BANK	FHLB		5.25%	51,035.00	AC	09/12/2014
07-120-395		MBFINAICIAL BANK	KANE COUNTY FO		4.50%	100,000.00	AC	12/15/2014
07-120-304		MBFINANCIAL BANK	FHLB		2.75%	200,656.60	AC	03/13/2015
07-120-392		MBFINANCIAL BANK	FHLB		4.13%	100,932.00	AC	03/13/2015
07-120-394		MBFINANCIAL BANK	FFCB		4.15%	49,700.00	AC	03/25/2015
07-120-419		MBFINANCIAL BANK	MORTON GROVE		3.25%	50,064.00	AC	06/01/2015
07-120-374		MBFINANCIAL BANK	FHLB		5.50%	150,495.50	AC	06/12/2015
07-120-302		MBFINACIAL BANK	FNMA NOTE		3.05%	150,000.00	AC	08/10/2015
07-120-413		MBFINANCIAL BANK	ROUND LAKE BEA		4.50%	75,618.00	AC	01/01/2016
07-120-414		MBFINANCIAL BANK	ALSIP II BLD AM		4.25%	50,000.00	AC	01/01/2016
07-120-363		MBFINANCIAL BANK	FFCB		4.88%	146,980.50	AC	01/11/2016
07-120-410		MBFINANCIAL BANK	US TREAS INFL I		2.00%	131,464.13	AC	01/15/2016
07-120-402		MBFINANCIAL BANK	FFCB		3.75%	50,280.00	AC	01/29/2016
07-120-298		MBFINANCIAL BANK	FNCT		7.00%	10,545.52	AC	02/01/2016

ACCOUNT NUMBER	ID. NO.	FINANCIAL INSTITUTION	CERTIFICATE NUMBER	TERM (DAYS)	ANNUAL YIELD	PRINCIPAL	TYPE	MATURE DATE
07-120-409		MBFINANCIAL BANK	FFCB		4.00%	100,242.00	AC	08/03/2016
07-120-367		MBFINANCIAL BANK	FHLB		5.37%	152,704.50	AC	09/09/2016
07-120-415		MBFINANCIAL BANK	AURORA IL		4.00%	25,077.75	AC	12/30/2016
07-120-404		MBFINANCIAL BANK	FFCB		4.63%	105,720.00	AC	03/21/2017
07-120-377		MBFINANCIAL BANK	FHLB		5.56%	74,351.25	AC	06/06/2017
07-120-376		MBFINANCIAL BANK	FFCB		5.95%	74,953.13	AC	08/10/2017
07-120-365		MBFINANCIAL BANK	FHLB		5.00%	25,000.00	AC	11/21/2017
07-120-389		MBFINANCIAL BANK	FFCB		4.70%	202,900.00	AC	01/17/2018
07-120-405		MBFINANCIAL BANK	FFCB		4.67%	52,400.00	AC	02/27/2018
07-120-391		MBFINANCIAL BANK	FHLB		4.50%	49,850.00	AC	02/28/2018
07-120-383		MBFINANCIAL BANK	FFCB		4.95%	24,969.25	AC	09/10/2018
07-120-379		MBFINANCIAL BANK	FFCB		5.34%	51,339.50	AC	10/22/2018
07-120-420		MBFINANCIAL BANK	COOK COUNTY 00		4.39%	50,050.00	AC	12/01/2018
07-120-417		MBFINANCIAL BANK	PALATINE Il		4.30%	50,000.00	AC	12/01/2018
07-120-345		MBFINANCIAL BANK	GNMA		5.00%	28,696.00	AC	12/18/2018
07-120-412		MBFINANCIAL BANK	US TREAS INFL I		2.13%	61,606.41	AC	01/15/2019
07-120-408		MBFINANCIAL BANK	FHLB		4.30%	75,942.60	AC	03/06/2019
07-120-403		MBFINANCIAL BANK	FHLB		4.65%	50,062.50	AC	03/14/2019
07-120-369		MBFINANCIAL BANK	FHLB		5.38%	101,790.00	AC	05/15/2019
07-120-296		MBFINANCIAL BANK	GNMA POOL		4.50%	51,667.51	AC	06/15/2019
07-120-306		MBFINANCIAL BANK	FHLB		4.35%	100,468.75	AC	08/05/2019
07-120-364		MBFINANCIAL BANK	FFCB		4.95%	72,869.25	AC	12/16/2019
07-120-400		MBFINANCIAL BANK	CHICAGO IL		6.33%	76,738.50	AC	12/01/2021
07-120-366		MBFINANCIAL BANK	FHLB		5.00%	198,870.00	AC	12/10/2021
07-120-386		MBFINANCIAL BANK	FHLB		5.00%	49,825.50	AC	12/10/2021
07-120-384		MBFINANCIAL BANK	FHLB		5.25%	256,522.75	AC	08/15/2022
07-120-309		MBFINANCIAL BANK	GNMA		8.65%	407.30	AC	07/20/2024
07-120-299		MBFINANCIAL BANK	GNMA		6.00%	14,378.57	AC	08/20/2028
			TOTAL AGENCY CERTIFICATES			$5,072,728.84		
07-120-292		MBFINANCIAL BANK	CD		4.20%	100,000.00	CD	12/12/2011
			TOTAL CERTIFICATE OF DEPOSIT			$100,000.00		
07-120-347		MBFINANCIAL BANK	WARREN TWP		4.00%	102,078.00	MB	01/01/2011
07-120-291		MBFINANCIAL BANK	BEDFORD PARK		5.00%	50,721.50	MB	12/15/2011
07-120-381		MBFINANCIAL BANK	COLLINSVILLE		5.20%	20,260.20	MB	12/15/2013
07-120-375		MBFINANCIAL BANK	MATOON		4.50%	24,016.00	MB	12/15/2013
07-120-356		MBFINANCIAL BANK	WHEATON III		5.20%	29,935.80	MB	12/30/2014
07-120-338		MBFINANCIAL BANK	MOLINE		5.30%	100,000.00	MB	11/01/2015
07-120-301		MBFINANCIAL BANK	TINLEY PARK BLD		2.85%	49,405.50	MB	12/01/2015
07-120-300		MBFINANCIAL BANK	COOK COUNTY CC		4.40%	76,092.75	MB	12/01/2016
07-120-382		MBFINANCIAL BANK	COOK COUNTY		5.25%	24,750.00	MB	12/15/2018
07-120-370		MBFINANCIAL BANK	ROUND LAKE		5.70%	99,821.00	MB	01/01/2019
07-120-372		MBFINANCIAL BANK	SPORTS AUTHRTY		5.45%	25,153.50	MB	06/15/2019
07-120-359		MBFINANCIAL BANK	HOFFMAN ESTS		5.40%	13,985.55	MB	12/01/2033
			TOTAL MUNICIPAL BONDS			$616,219.80		
07-120-290		MBFINANCIAL BANK	MUTUAL FUND			4,888,014.37	MF	N/A
			TOTAL MUTUAL FUNDS			$4,888,014.37		

ACCOUNT NUMBER ID. NO.	FINANCIAL INSTITUTION	CERTIFICATE NUMBER	TERM (DAYS)	ANNUAL YIELD	PRINCIPAL	TYPE	MATURE DATE
07-110-202	COMMUNITY BANK OF WB	MONEY MARKET		0.27%	35,600.39	MM	N/A
07-110-322	ILLINOIS FUNDS	MONEY MARKET		0.97%	18.94	MM	N/A
07-110-335	MBFINANCIAL BANK	MONEY MARKET		0.50%	299,011.16	MM	N/A
		TOTAL MONEY MARKET			$334,630.49		
07-120-900	IMET MARKET VALUE CONTRA	MARKET VALUE			-607,137.28	MV	N/A
		TOTAL MARKET VALUE			$-607,137.28		
07-120-354	MBFINANCIAL BANK	US T-NOTE		4.75%	117,692.12	TN	05/15/2014
07-120-373	MBFINANCIAL BANK	US T-NOTE		5.13%	149,332.03	TN	05/15/2016
07-120-387	MBFINANCIAL BANK	US T-NOTE		4.25%	100,156.15	TN	11/15/2017
		TOTAL TREASURY NOTES			$367,180.30		
		TOTAL POLICE PENSION FUND			$10,771,636.52		
		AVERAGE ANNUAL YIELD			4.29 %		
SSA ONE PROJECT FUND							
08-110-323	IMET	MONEY MARKET		0.56%	51,404.69	MM	N/A
		TOTAL MONEY MARKET			$51,404.69		
		TOTAL SSA ONE PROJECT FUND			$51,404.69		
		AVERAGE ANNUAL YIELD			0.56 %		
WATER CAPITAL IMPROVEMENTS FUND							
09-110-322	ILLINOIS FUNDS	MONEY MARKET		0.97%	139,513.04	MM	N/A
		TOTAL MONEY MARKET			$139,513.04		
		TOTAL WATER CAPITAL IMPROVEMENTS FUND			$139,513.04		
		AVERAGE ANNUAL YIELD			0.97 %		
CAPITAL PROJECT FUND							
10-110-322	ILLINOIS FUNDS	MONEY MARKET		0.97%	234,786.31	MM	N/A
10-110-325	IMET	MONEY MARKET		0.60%	226,883.29	MM	N/A
		TOTAL MONEY MARKET			$461,669.60		
		TOTAL CAPITAL PROJECT FUND			$461,669.60		
		AVERAGE ANNUAL YIELD			0.79 %		

GRAND TOTAL INVESTED $14,935,382.71

INVESTMENT TYPES

AC	AGENCY CERTIFICATES	MM	MONEY MARKET
CD	CERTIFICATE OF DEPOSIT	MV	MARKET VALUE
CK	CHECKING	PC	PETTY CASH
MB	MUNICIPAL BONDS	SV	SAVINGS
MF	MUTUAL FUNDS	TN	TREASURY NOTES

VILLAGE OF WILLOWBROOK

INVESTMENTS BY FUND (SUMMARY) MARCH 31, 2010

FUND	INVESTMENTS
GENERAL CORPORATE FUND	2,932,690.81
WATER FUND	465,685.05
HOTEL/MOTEL TAX FUND	15,766.89
MOTOR FUEL TAX FUND	81,948.14
T I F SPECIAL REVENUE FUND	8,130.12
SSA ONE BOND & INTEREST FUND	6,937.85
POLICE PENSION FUND	10,771,636.52
SSA ONE PROJECT FUND	51,404.69
WATER CAPITAL IMPROVEMENTS FUND	139,513.04
CAPITAL PROJECT FUND	461,669.60
TOTAL INVESTED (ALL FUNDS):	$14,935,382.71

VILLAGE OF WILLOWBROOK

INVESTMENTS BY TYPE (SUMMARY) MARCH 31, 2010

TYPE	AMOUNT	YIELD	NON-INTEREST	TOTAL INV.
AGENCY CERTIFICATES	5,672,728.84	4.05 %		5,672,728.84
CERTIFICATE OF DEPOSIT	100,000.00	4.20 %		100,000.00
MUNICIPAL BONDS	616,219.80	4.78 %		616,219.80
MUTUAL FUNDS			4,888,014.37	4,888,014.37
MONEY MARKET	3,679,457.83	0.94 %		3,679,457.83
MARKET VALUE			-428,087.41	-428,087.41
PETTY CASH			950.00	950.00
SAVINGS			38,918.98	38,918.98
TREASURY NOTES	367,180.30	4.77 %		367,180.30
TOTAL ALL FUNDS	$10,435,586.77		$4,499,795.94	$14,935,382.71

INSTITUTION	VILLAGE FUNDS	PENSION FUNDS	TOTAL FUNDS
COMMUNITY BANK OF WB	2,600,967.23	35,600.39	2,636,567.62
ILLINOIS FUNDS	497,553.26	18.94	497,572.20
IMET	885,225.83		885,225.83
IMET MARKET VALUE CONTRA	179,049.87	-607,137.28	-428,087.41
MBFINACIAL BANK		150,000.00	150,000.00
MBFINAICIAL BANK		100,000.00	100,000.00
MBFINANCIAL BANK		50,050.00	50,050.00
MBFINANCIAL BANK		11,043,104.47	11,043,104.47
VILLAGE OF WILLOWBROOK	950.00		950.00
TOTALS	$4,163,746.19	$10,771,636.52	$14,935,382.71

ACCOUNT NUMBER ID. NO.	FINANCIAL INSTITUTION	CERTIFICATE NUMBER	TERM (DAYS)	ANNUAL YIELD	PRINCIPAL	TYPE	MATURE DATE
01-110-323	COMMUNITY BANK OF WB	MONEY MARKET		1.24%	1,929,936.84	MM	N/A
01-110-325	COMMUNITY BANK OF WB	MONEY MARKET		0.85%	8,126.65	MM	N/A
01-110-330	COMMUNITY BANK OF WB	MONEY MARKET		0.27%	8,260.07	MM	N/A
01-110-380	COMMUNITY BANK OF WB	MONEY MARKET		0.85%	153,946.36	MM	N/A
02-110-209	COMMUNITY BANK OF WB	MONEY MARKET		0.27%	461,778.33	MM	N/A
07-110-202	COMMUNITY BANK OF WB	MONEY MARKET		0.27%	35,600.39	MM	N/A
01-110-257	COMMUNITY BANK OF WB	SAVINGS			38,918.98	SV	N/A
	TOTAL INVESTED				$2,636,567.62		
01-110-322	ILLINOIS FUNDS	MONEY MARKET		0.97%	13,502.04	MM	N/A
02-110-322	ILLINOIS FUNDS	MONEY MARKET		0.97%	3,906.72	MM	N/A
03-110-322	ILLINOIS FUNDS	MONEY MARKET		0.97%	15,766.89	MM	N/A
04-110-322	ILLINOIS FUNDS	MONEY MARKET		0.97%	81,948.14	MM	N/A
05-110-322	ILLINOIS FUNDS	MONEY MARKET		0.97%	8,130.12	MM	N/A
07-110-322	ILLINOIS FUNDS	MONEY MARKET		0.97%	18.94	MM	N/A
09-110-322	ILLINOIS FUNDS	MONEY MARKET		0.97%	139,513.04	MM	N/A
10-110-322	ILLINOIS FUNDS	MONEY MARKET		0.97%	234,786.31	MM	N/A
	TOTAL INVESTED				$497,572.20		
01-120-154	IMET	POOLED INVEST		0.63%	600,000.00	AC	N/A
06-110-323	IMET	MONEY MARKET		0.56%	6,937.85	MM	N/A
08-110-323	IMET	MONEY MARKET		0.56%	51,404.69	MM	N/A
10-110-325	IMET	MONEY MARKET		0.60%	226,883.29	MM	N/A
	TOTAL INVESTED				$885,225.83		
01-120-900	IMET MARKET VALUE CONTRA	MARKET VALUE			179,049.87	MV	N/A
07-120-900	IMET MARKET VALUE CONTRA	MARKET VALUE			-607,137.28	MV	N/A
	TOTAL INVESTED				$-428,087.41		
07-120-302	MBFINACIAL BANK	FNMA NOTE		3.05%	150,000.00	AC	08/10/2015
07-120-395	MBFINAICIAL BANK	KANE COUNTY FO		4.50%	100,000.00	AC	12/15/2014
07-120-420	MBFINANCIAL BANK	COOK COUNTY 00		4.39%	50,050.00	AC	12/01/2018
07-120-290	MBFINANCIAL BANK	MUTUAL FUND			4,888,014.37	MF	N/A
07-110-335	MBFINANCIAL BANK	MONEY MARKET		0.50%	299,011.16	MM	N/A
07-120-346	MBFINANCIAL BANK	FHLB		3.37%	100,245.00	AC	05/14/2010
07-120-344	MBFINANCIAL BANK	FHLB		4.25%	75,280.75	AC	11/15/2010
07-120-334	MBFINANCIAL BANK	FHLB		4.37%	200,000.00	AC	12/20/2010
07-120-347	MBFINANCIAL BANK	WARREN TWP		4.00%	102,078.00	MB	01/01/2011
07-120-388	MBFINANCIAL BANK	FHLB		4.87%	57,125.20	AC	03/11/2011
07-120-326	MBFINANCIAL BANK	FHLMC		6.00%	200,116.00	AC	06/15/2011
07-120-355	MBFINANCIAL BANK	FFCB		4.25%	63,040.67	AC	07/11/2011
07-120-294	MBFINANCIAL BANK	FHLB		4.88%	61,874.40	AC	11/15/2011
07-120-330	MBFINANCIAL BANK	FNMA		5.37%	68,598.60	AC	11/15/2011
07-120-342	MBFINANCIAL BANK	FHLB		4.88%	139,359.15	AC	11/15/2011
07-120-292	MBFINANCIAL BANK	CD		4.20%	100,000.00	CD	12/12/2011
07-120-291	MBFINANCIAL BANK	BEDFORD PARK		5.00%	50,721.50	MB	12/15/2011

ACCOUNT NUMBER	ID. NO.	FINANCIAL INSTITUTION	CERTIFICATE NUMBER	TERM (DAYS)	ANNUAL YIELD	PRINCIPAL	TYPE	MATURE DATE
07-120-406		MBFINANCIAL BANK	SOTHERN ILL UNI		2.90%	25,102.50	AC	04/01/2012
07-120-411		MBFINANCIAL BANK	US TREAS INFL I		2.00%	130,325.05	AC	04/15/2012
07-120-418		MBFINANCIAL BANK	KANE COUNTY BLI		2.00%	49,999.50	AC	12/15/2012
07-120-396		MBFINANCIAL BANK	FNMA		4.38%	99,816.00	AC	07/17/2013
07-120-375		MBFINANCIAL BANK	MATOON		4.50%	24,016.00	MB	12/15/2013
07-120-381		MBFINANCIAL BANK	COLLINSVILLE		5.20%	20,260.20	MB	12/15/2013
07-120-393		MBFINANCIAL BANK	FHLMC		4.50%	51,782.00	AC	04/02/2014
07-120-416		MBFINANCIAL BANK	CRYSTAL LAKE BI		4.65%	25,000.00	AC	05/15/2014
07-120-354		MBFINANCIAL BANK	US T-NOTE		4.75%	117,692.12	TN	05/15/2014
07-120-407		MBFINANCIAL BANK	FHLB		3.40%	152,676.00	AC	06/17/2014
07-120-378		MBFINANCIAL BANK	FHLB		5.80%	75,213.75	AC	08/13/2014
07-120-380		MBFINANCIAL BANK	FHLB		5.25%	51,035.00	AC	09/12/2014
07-120-356		MBFINANCIAL BANK	WHEATON III		5.20%	29,935.80	MB	12/30/2014
07-120-304		MBFINANCIAL BANK	FHLB		2.75%	200,656.60	AC	03/13/2015
07-120-392		MBFINANCIAL BANK	FHLB		4.13%	100,932.00	AC	03/13/2015
07-120-394		MBFINANCIAL BANK	FFCB		4.15%	49,700.00	AC	03/25/2015
07-120-419		MBFINANCIAL BANK	MORTON GROVE		3.25%	50,064.00	AC	06/01/2015
07-120-374		MBFINANCIAL BANK	FHLB		5.50%	150,495.50	AC	06/12/2015
07-120-338		MBFINANCIAL BANK	MOLINE		5.30%	100,000.00	MB	11/01/2015
07-120-301		MBFINANCIAL BANK	TINLEY PARK BLD		2.85%	49,405.50	MB	12/01/2015
07-120-413		MBFINANCIAL BANK	ROUND LAKE BEA		4.50%	75,618.00	AC	01/01/2016
07-120-414		MBFINANCIAL BANK	ALSIP II BLD AM		4.25%	50,000.00	AC	01/01/2016
07-120-363		MBFINANCIAL BANK	FFCB		4.88%	146,980.50	AC	01/11/2016
07-120-410		MBFINANCIAL BANK	US TREAS INFL I		2.00%	131,464.13	AC	01/15/2016
07-120-402		MBFINANCIAL BANK	FFCB		3.75%	50,280.00	AC	01/29/2016
07-120-298		MBFINANCIAL BANK	FNCT		7.00%	10,545.52	AC	02/01/2016
07-120-373		MBFINANCIAL BANK	US T-NOTE		5.13%	149,332.03	TN	05/15/2016
07-120-409		MBFINANCIAL BANK	FFCB		4.00%	100,242.00	AC	08/03/2016
07-120-367		MBFINANCIAL BANK	FHLB		5.37%	152,704.50	AC	09/09/2016
07-120-300		MBFINANCIAL BANK	COOK COUNTY CC		4.40%	76,092.75	MB	12/01/2016
07-120-415		MBFINANCIAL BANK	AURORA IL		4.00%	25,077.75	AC	12/30/2016
07-120-404		MBFINANCIAL BANK	FFCB		4.63%	105,720.00	AC	03/21/2017
07-120-377		MBFINANCIAL BANK	FHLB		5.56%	74,351.25	AC	06/06/2017
07-120-376		MBFINANCIAL BANK	FFCB		5.95%	74,953.13	AC	08/10/2017
07-120-387		MBFINANCIAL BANK	US T-NOTE		4.25%	100,156.15	TN	11/15/2017
07-120-365		MBFINANCIAL BANK	FHLB		5.00%	25,000.00	AC	11/21/2017
07-120-389		MBFINANCIAL BANK	FFCB		4.70%	202,900.00	AC	01/17/2018
07-120-405		MBFINANCIAL BANK	FFCB		4.67%	52,400.00	AC	02/27/2018
07-120-391		MBFINANCIAL BANK	FHLB		4.50%	49,850.00	AC	02/28/2018
07-120-383		MBFINANCIAL BANK	FFCB		4.95%	24,969.25	AC	09/10/2018
07-120-379		MBFINANCIAL BANK	FFCB		5.34%	51,339.50	AC	10/22/2018
07-120-417		MBFINANCIAL BANK	PALATINE II		4.30%	50,000.00	AC	12/01/2018
07-120-382		MBFINANCIAL BANK	COOK COUNTY		5.25%	24,750.00	MB	12/15/2018
07-120-345		MBFINANCIAL BANK	GNMA		5.00%	28,696.00	AC	12/18/2018
07-120-370		MBFINANCIAL BANK	ROUND LAKE		5.70%	99,821.00	MB	01/01/2019
07-120-412		MBFINANCIAL BANK	US TREAS INFL I		2.13%	61,606.41	AC	01/15/2019
07-120-408		MBFINANCIAL BANK	FHLB		4.30%	75,942.60	AC	03/06/2019
07-120-403		MBFINANCIAL BANK	FHLB		4.65%	50,062.50	AC	03/14/2019
07-120-369		MBFINANCIAL BANK	FHLB		5.38%	101,790.00	AC	05/15/2019

ACCOUNT NUMBER ID. NO.	FINANCIAL INSTITUTION	CERTIFICATE NUMBER	TERM (DAYS)	ANNUAL YIELD	PRINCIPAL	TYPE	MATURE DATE
07-120-296	MBFINANCIAL BANK	GNMA POOL		4.50%	51,667.51	AC	06/15/2019
07-120-372	MBFINANCIAL BANK	SPORTS AUTHRTY		5.45%	25,153.50	MB	06/15/2019
07-120-306	MBFINANCIAL BANK	FHLB		4.35%	100,468.75	AC	08/05/2019
07-120-364	MBFINANCIAL BANK	FFCB		4.95%	72,869.25	AC	12/16/2019
07-120-400	MBFINANCIAL BANK	CHICAGO IL		6.33%	76,738.50	AC	12/01/2021
07-120-366	MBFINANCIAL BANK	FHLB		5.00%	198,870.00	AC	12/10/2021
07-120-386	MBFINANCIAL BANK	FHLB		5.00%	49,825.50	AC	12/10/2021
07-120-384	MBFINANCIAL BANK	FHLB		5.25%	256,522.75	AC	08/15/2022
07-120-309	MBFINANCIAL BANK	GNMA		8.65%	407.30	AC	07/20/2024
07-120-299	MBFINANCIAL BANK	GNMA		6.00%	14,378.57	AC	08/20/2028
07-120-359	MBFINANCIAL BANK	HOFFMAN ESTS		5.40%	13,985.55	MB	12/01/2033
	TOTAL INVESTED				$11,043,104.47		
01-110-911	VILLAGE OF WILLOWBROOK	PETTY CASH			950.00	PC	N/A
	GRAND TOTAL INVESTED				$14,935,382.71		

ACCOUNT NUMBER	ID. NO.	FINANCIAL INSTITUTION	CERTIFICATE NUMBER	TERM (DAYS)	ANNUAL YIELD	PRINCIPAL	TYPE	MATURE DATE
01-120-154		IMET	POOLED INVEST		0.63%	600,000.00	AC	N/A
07-120-346		MBFINANCIAL BANK	FHLB		3.37%	100,245.00	AC	05/14/2010
07-120-344		MBFINANCIAL BANK	FHLB		4.25%	75,280.75	AC	11/15/2010
07-120-334		MBFINANCIAL BANK	FHLB		4.37%	200,000.00	AC	12/20/2010
07-120-388		MBFINANCIAL BANK	FHLB		4.87%	57,125.20	AC	03/11/2011
07-120-326		MBFINANCIAL BANK	FHLMC		6.00%	200,116.00	AC	06/15/2011
07-120-355		MBFINANCIAL BANK	FFCB		4.25%	63,040.67	AC	07/11/2011
07-120-294		MBFINANCIAL BANK	FHLB		4.88%	61,874.40	AC	11/15/2011
07-120-330		MBFINANCIAL BANK	FNMA		5.37%	68,598.60	AC	11/15/2011
07-120-342		MBFINANCIAL BANK	FHLB		4.88%	139,359.15	AC	11/15/2011
07-120-406		MBFINANCIAL BANK	SOTHERN ILL UNI		2.90%	25,102.50	AC	04/01/2012
07-120-411		MBFINANCIAL BANK	US TREAS INFL I		2.00%	130,325.05	AC	04/15/2012
07-120-418		MBFINANCIAL BANK	KANE COUNTY BLI		2.00%	49,999.50	AC	12/15/2012
07-120-396		MBFINANCIAL BANK	FNMA		4.38%	99,816.00	AC	07/17/2013
07-120-393		MBFINANCIAL BANK	FHLMC		4.50%	51,782.00	AC	04/02/2014
07-120-416		MBFINANCIAL BANK	CRYSTAL LAKE BI		4.65%	25,000.00	AC	05/15/2014
07-120-407		MBFINANCIAL BANK	FHLB		3.40%	152,676.00	AC	06/17/2014
07-120-378		MBFINANCIAL BANK	FHLB		5.80%	75,213.75	AC	08/13/2014
07-120-380		MBFINANCIAL BANK	FHLB		5.25%	51,035.00	AC	09/12/2014
07-120-395		MBFINAICIAL BANK	KANE COUNTY FO		4.50%	100,000.00	AC	12/15/2014
07-120-304		MBFINANCIAL BANK	FHLB		2.75%	200,656.60	AC	03/13/2015
07-120-392		MBFINANCIAL BANK	FHLB		4.13%	100,932.00	AC	03/13/2015
07-120-394		MBFINANCIAL BANK	FFCB		4.15%	49,700.00	AC	03/25/2015
07-120-419		MBFINANCIAL BANK	MORTON GROVE		3.25%	50,064.00	AC	06/01/2015
07-120-374		MBFINANCIAL BANK	FHLB		5.50%	150,495.50	AC	06/12/2015
07-120-302		MBFINACIAL BANK	FNMA NOTE		3.05%	150,000.00	AC	08/10/2015
07-120-413		MBFINANCIAL BANK	ROUND LAKE BEA		4.50%	75,618.00	AC	01/01/2016
07-120-414		MBFINANCIAL BANK	ALSIP II BLD AM		4.25%	50,000.00	AC	01/01/2016
07-120-363		MBFINANCIAL BANK	FFCB		4.88%	146,980.50	AC	01/11/2016
07-120-410		MBFINANCIAL BANK	US TREAS INFL I		2.00%	131,464.13	AC	01/15/2016
07-120-402		MBFINANCIAL BANK	FFCB		3.75%	50,280.00	AC	01/29/2016
07-120-298		MBFINANCIAL BANK	FNCT		7.00%	10,545.52	AC	02/01/2016
07-120-409		MBFINANCIAL BANK	FFCB		4.00%	100,242.00	AC	08/03/2016
07-120-367		MBFINANCIAL BANK	FHLB		5.37%	152,704.50	AC	09/09/2016
07-120-415		MBFINANCIAL BANK	AURORA IL		4.00%	25,077.75	AC	12/30/2016
07-120-404		MBFINANCIAL BANK	FFCB		4.63%	105,720.00	AC	03/21/2017
07-120-377		MBFINANCIAL BANK	FHLB		5.56%	74,351.25	AC	06/06/2017
07-120-376		MBFINANCIAL BANK	FFCB		5.95%	74,953.13	AC	08/10/2017
07-120-365		MBFINANCIAL BANK	FHLB		5.00%	25,000.00	AC	11/21/2017
07-120-389		MBFINANCIAL BANK	FFCB		4.70%	202,900.00	AC	01/17/2018
07-120-405		MBFINANCIAL BANK	FFCB		4.67%	52,400.00	AC	02/27/2018
07-120-391		MBFINANCIAL BANK	FHLB		4.50%	49,850.00	AC	02/28/2018
07-120-383		MBFINANCIAL BANK	FFCB		4.95%	24,969.25	AC	09/10/2018
07-120-379		MBFINANCIAL BANK	FFCB		5.34%	51,339.50	AC	10/22/2018
07-120-420		MBFINANCIAL BANK	COOK COUNTY 00		4.39%	50,050.00	AC	12/01/2018
07-120-417		MBFINANCIAL BANK	PALATINE II		4.30%	50,000.00	AC	12/01/2018
07-120-345		MBFINANCIAL BANK	GNMA		5.00%	28,696.00	AC	12/18/2018
07-120-412		MBFINANCIAL BANK	US TREAS INFL I		2.13%	61,606.41	AC	01/15/2019
07-120-408		MBFINANCIAL BANK	FHLB		4.30%	75,942.60	AC	03/06/2019

ACCOUNT NUMBER	ID. NO.	FINANCIAL INSTITUTION	CERTIFICATE NUMBER	TERM (DAYS)	ANNUAL YIELD	PRINCIPAL	TYPE	MATURE DATE
07-120-403		MBFINANCIAL BANK	FHLB		4.65%	50,062.50	AC	03/14/2019
07-120-369		MBFINANCIAL BANK	FHLB		5.38%	101,790.00	AC	05/15/2019
07-120-296		MBFINANCIAL BANK	GNMA POOL		4.50%	51,667.51	AC	06/15/2019
07-120-306		MBFINANCIAL BANK	FHLB		4.35%	100,468.75	AC	08/05/2019
07-120-364		MBFINANCIAL BANK	FFCB		4.95%	72,869.25	AC	12/16/2019
07-120-400		MBFINANCIAL BANK	CHICAGO IL		6.33%	76,738.50	AC	12/01/2021
07-120-366		MBFINANCIAL BANK	FHLB		5.00%	198,870.00	AC	12/10/2021
07-120-386		MBFINANCIAL BANK	FHLB		5.00%	49,825.50	AC	12/10/2021
07-120-384		MBFINANCIAL BANK	FHLB		5.25%	256,522.75	AC	08/15/2022
07-120-309		MBFINANCIAL BANK	GNMA		8.65%	407.30	AC	07/20/2024
07-120-299		MBFINANCIAL BANK	GNMA		6.00%	14,378.57	AC	08/20/2028
		TOTAL INVESTED				$5,672,728.84		
07-120-292		MBFINANCIAL BANK	CD		4.20%	100,000.00	CD	12/12/2011
07-120-347		MBFINANCIAL BANK	WARREN TWP		4.00%	102,078.00	MB	01/01/2011
07-120-291		MBFINANCIAL BANK	BEDFORD PARK		5.00%	50,721.50	MB	12/15/2011
07-120-375		MBFINANCIAL BANK	MATOON		4.50%	24,016.00	MB	12/15/2013
07-120-381		MBFINANCIAL BANK	COLLINSVILLE		5.20%	20,260.20	MB	12/15/2013
07-120-356		MBFINANCIAL BANK	WHEATON III		5.20%	29,935.80	MB	12/30/2014
07-120-338		MBFINANCIAL BANK	MOLINE		5.30%	100,000.00	MB	11/01/2015
07-120-301		MBFINANCIAL BANK	TINLEY PARK BLD		2.85%	49,405.50	MB	12/01/2015
07-120-300		MBFINANCIAL BANK	COOK COUNTY CC		4.40%	76,092.75	MB	12/01/2016
07-120-382		MBFINANCIAL BANK	COOK COUNTY		5.25%	24,750.00	MB	12/15/2018
07-120-370		MBFINANCIAL BANK	ROUND LAKE		5.70%	99,821.00	MB	01/01/2019
07-120-372		MBFINANCIAL BANK	SPORTS AUTHRTY		5.45%	25,153.50	MB	06/15/2019
07-120-359		MBFINANCIAL BANK	HOFFMAN ESTS		5.40%	13,985.55	MB	12/01/2033
		TOTAL INVESTED				$616,219.80		
07-120-290		MBFINANCIAL BANK	MUTUAL FUND			4,888,014.37	MF	N/A
01-110-323		COMMUNITY BANK OF WB	MONEY MARKET		1.24%	1,929,936.84	MM	N/A
01-110-325		COMMUNITY BANK OF WB	MONEY MARKET		0.85%	8,126.65	MM	N/A
01-110-330		COMMUNITY BANK OF WB	MONEY MARKET		0.27%	8,260.07	MM	N/A
01-110-380		COMMUNITY BANK OF WB	MONEY MARKET		0.85%	153,946.36	MM	N/A
02-110-209		COMMUNITY BANK OF WB	MONEY MARKET		0.27%	461,778.33	MM	N/A
07-110-202		COMMUNITY BANK OF WB	MONEY MARKET		0.27%	35,600.39	MM	N/A
01-110-322		ILLINOIS FUNDS	MONEY MARKET		0.97%	13,502.04	MM	N/A
02-110-322		ILLINOIS FUNDS	MONEY MARKET		0.97%	3,906.72	MM	N/A
03-110-322		ILLINOIS FUNDS	MONEY MARKET		0.97%	15,766.89	MM	N/A
04-110-322		ILLINOIS FUNDS	MONEY MARKET		0.97%	81,948.14	MM	N/A
05-110-322		ILLINOIS FUNDS	MONEY MARKET		0.97%	8,130.12	MM	N/A
07-110-322		ILLINOIS FUNDS	MONEY MARKET		0.97%	18.94	MM	N/A
09-110-322		ILLINOIS FUNDS	MONEY MARKET		0.97%	139,513.04	MM	N/A
10-110-322		ILLINOIS FUNDS	MONEY MARKET		0.97%	234,786.31	MM	N/A
06-110-323		IMET	MONEY MARKET		0.56%	6,937.85	MM	N/A
08-110-323		IMET	MONEY MARKET		0.56%	51,404.69	MM	N/A
10-110-325		IMET	MONEY MARKET		0.60%	226,883.29	MM	N/A
07-110-335		MBFINANCIAL BANK	MONEY MARKET		0.50%	299,011.16	MM	N/A

ACCOUNT NUMBER	ID. NO.	FINANCIAL INSTITUTION	CERTIFICATE NUMBER	TERM (DAYS)	ANNUAL YIELD	PRINCIPAL	TYPE	MATURE DATE
		TOTAL INVESTED				$3,679,457.83		
01-120-900		IMET MARKET VALUE CONTRA	MARKET VALUE			179,049.87	MV	N/A
07-120-900		IMET MARKET VALUE CONTRA	MARKET VALUE			-607,137.28	MV	N/A
		TOTAL INVESTED				$-428,087.41		
01-110-911		VILLAGE OF WILLOWBROOK	PETTY CASH			950.00	PC	N/A
01-110-257		COMMUNITY BANK OF WB	SAVINGS			38,918.98	SV	N/A
07-120-354		MBFINANCIAL BANK	US T-NOTE		4.75%	117,692.12	TN	05/15/2014
07-120-373		MBFINANCIAL BANK	US T-NOTE		5.13%	149,332.03	TN	05/15/2016
07-120-387		MBFINANCIAL BANK	US T-NOTE		4.25%	100,156.15	TN	11/15/2017
		TOTAL INVESTED				$367,180.30		
		GRAND TOTAL INVESTED				$14,935,382.71		

ACCOUNT NUMBER ID. NO.	FINANCIAL INSTITUTION	CERTIFICATE NUMBER	TERM (DAYS)	ANNUAL YIELD	PRINCIPAL	TYPE	MATURE DATE
01-120-154	IMET	POOLED INVEST		0.63%	600,000.00	AC	N/A
07-120-290	MBFINANCIAL BANK	MUTUAL FUND			4,888,014.37	MF	N/A
01-110-323	COMMUNITY BANK OF WB	MONEY MARKET		1.24%	1,929,936.84	MM	N/A
01-110-325	COMMUNITY BANK OF WB	MONEY MARKET		0.85%	8,126.65	MM	N/A
01-110-330	COMMUNITY BANK OF WB	MONEY MARKET		0.27%	8,260.07	MM	N/A
01-110-380	COMMUNITY BANK OF WB	MONEY MARKET		0.85%	153,946.36	MM	N/A
02-110-209	COMMUNITY BANK OF WB	MONEY MARKET		0.27%	461,778.33	MM	N/A
07-110-202	COMMUNITY BANK OF WB	MONEY MARKET		0.27%	35,600.39	MM	N/A
01-110-322	ILLINOIS FUNDS	MONEY MARKET		0.97%	13,502.04	MM	N/A
02-110-322	ILLINOIS FUNDS	MONEY MARKET		0.97%	3,906.72	MM	N/A
03-110-322	ILLINOIS FUNDS	MONEY MARKET		0.97%	15,766.89	MM	N/A
04-110-322	ILLINOIS FUNDS	MONEY MARKET		0.97%	81,948.14	MM	N/A
05-110-322	ILLINOIS FUNDS	MONEY MARKET		0.97%	8,130.12	MM	N/A
07-110-322	ILLINOIS FUNDS	MONEY MARKET		0.97%	18.94	MM	N/A
09-110-322	ILLINOIS FUNDS	MONEY MARKET		0.97%	139,513.04	MM	N/A
10-110-322	ILLINOIS FUNDS	MONEY MARKET		0.97%	234,786.31	MM	N/A
06-110-323	IMET	MONEY MARKET		0.56%	6,937.85	MM	N/A
08-110-323	IMET	MONEY MARKET		0.56%	51,404.69	MM	N/A
10-110-325	IMET	MONEY MARKET		0.60%	226,883.29	MM	N/A
07-110-335	MBFINANCIAL BANK	MONEY MARKET		0.50%	299,011.16	MM	N/A
01-120-900	IMET MARKET VALUE CONTRA	MARKET VALUE			179,049.87	MV	N/A
07-120-900	IMET MARKET VALUE CONTRA	MARKET VALUE			-607,137.28	MV	N/A
01-110-911	VILLAGE OF WILLOWBROOK	PETTY CASH			950.00	PC	N/A
01-110-257	COMMUNITY BANK OF WB	SAVINGS			38,918.98	SV	N/A
07-120-346	MBFINANCIAL BANK	FHLB		3.37%	100,245.00	AC	05/14/2010
07-120-344	MBFINANCIAL BANK	FHLB		4.25%	75,280.75	AC	11/15/2010
07-120-334	MBFINANCIAL BANK	FHLB		4.37%	200,000.00	AC	12/20/2010
07-120-347	MBFINANCIAL BANK	WARREN TWP		4.00%	102,078.00	MB	01/01/2011
07-120-388	MBFINANCIAL BANK	FHLB		4.87%	57,125.20	AC	03/11/2011
07-120-326	MBFINANCIAL BANK	FHLMC		6.00%	200,116.00	AC	06/15/2011
07-120-355	MBFINANCIAL BANK	FFCB		4.25%	63,040.67	AC	07/11/2011
07-120-294	MBFINANCIAL BANK	FHLB		4.88%	61,874.40	AC	11/15/2011
07-120-330	MBFINANCIAL BANK	FNMA		5.37%	68,598.60	AC	11/15/2011
07-120-342	MBFINANCIAL BANK	FHLB		4.88%	139,359.15	AC	11/15/2011
07-120-292	MBFINANCIAL BANK	CD		4.20%	100,000.00	CD	12/12/2011
07-120-291	MBFINANCIAL BANK	BEDFORD PARK		5.00%	50,721.50	MB	12/15/2011
07-120-406	MBFINANCIAL BANK	SOTHERN ILL UNI		2.90%	25,102.50	AC	04/01/2012
07-120-411	MBFINANCIAL BANK	US TREAS INFL I		2.00%	130,325.05	AC	04/15/2012
07-120-418	MBFINANCIAL BANK	KANE COUNTY BLI		2.00%	49,999.50	AC	12/15/2012
07-120-396	MBFINANCIAL BANK	FNMA		4.38%	99,816.00	AC	07/17/2013
07-120-375	MBFINANCIAL BANK	MATOON		4.50%	24,016.00	MB	12/15/2013
07-120-381	MBFINANCIAL BANK	COLLINSVILLE		5.20%	20,260.20	MB	12/15/2013
07-120-393	MBFINANCIAL BANK	FHLMC		4.50%	51,782.00	AC	04/02/2014
07-120-416	MBFINANCIAL BANK	CRYSTAL LAKE BI		4.65%	25,000.00	AC	05/15/2014
07-120-354	MBFINANCIAL BANK	US T-NOTE		4.75%	117,692.12	TN	05/15/2014
07-120-407	MBFINANCIAL BANK	FHLB		3.40%	152,676.00	AC	06/17/2014
07-120-378	MBFINANCIAL BANK	FHLB		5.80%	75,213.75	AC	08/13/2014
07-120-380	MBFINANCIAL BANK	FHLB		5.25%	51,035.00	AC	09/12/2014
07-120-395	MBFINAICIAL BANK	KANE COUNTY FO		4.50%	100,000.00	AC	12/15/2014

ACCOUNT NUMBER ID. NO.	FINANCIAL INSTITUTION	CERTIFICATE NUMBER	TERM (DAYS)	ANNUAL YIELD	PRINCIPAL	TYPE	MATURE DATE
07-120-356	MBFINANCIAL BANK	WHEATON III		5.20%	29,935.80	MB	12/30/2014
07-120-304	MBFINANCIAL BANK	FHLB		2.75%	200,656.60	AC	03/13/2015
07-120-392	MBFINANCIAL BANK	FHLB		4.13%	100,932.00	AC	03/13/2015
07-120-394	MBFINANCIAL BANK	FFCB		4.15%	49,700.00	AC	03/25/2015
07-120-419	MBFINANCIAL BANK	MORTON GROVE		3.25%	50,064.00	AC	06/01/2015
07-120-374	MBFINANCIAL BANK	FHLB		5.50%	150,495.50	AC	06/12/2015
07-120-302	MBFINACIAL BANK	FNMA NOTE		3.05%	150,000.00	AC	08/10/2015
07-120-338	MBFINANCIAL BANK	MOLINE		5.30%	100,000.00	MB	11/01/2015
07-120-301	MBFINANCIAL BANK	TINLEY PARK BLD		2.85%	49,405.50	MB	12/01/2015
07-120-413	MBFINANCIAL BANK	ROUND LAKE BEA		4.50%	75,618.00	AC	01/01/2016
07-120-414	MBFINANCIAL BANK	ALSIP II BLD AM		4.25%	50,000.00	AC	01/01/2016
07-120-363	MBFINANCIAL BANK	FFCB		4.88%	146,980.50	AC	01/11/2016
07-120-410	MBFINANCIAL BANK	US TREAS INFL I		2.00%	131,464.13	AC	01/15/2016
07-120-402	MBFINANCIAL BANK	FFCB		3.75%	50,280.00	AC	01/29/2016
07-120-298	MBFINANCIAL BANK	FNCT		7.00%	10,545.52	AC	02/01/2016
07-120-373	MBFINANCIAL BANK	US T-NOTE		5.13%	149,332.03	TN	05/15/2016
07-120-409	MBFINANCIAL BANK	FFCB		4.00%	100,242.00	AC	08/03/2016
07-120-367	MBFINANCIAL BANK	FHLB		5.37%	152,704.50	AC	09/09/2016
07-120-300	MBFINANCIAL BANK	COOK COUNTY CC		4.40%	76,092.75	MB	12/01/2016
07-120-415	MBFINANCIAL BANK	AURORA IL		4.00%	25,077.75	AC	12/30/2016
07-120-404	MBFINANCIAL BANK	FFCB		4.63%	105,720.00	AC	03/21/2017
07-120-377	MBFINANCIAL BANK	FHLB		5.56%	74,351.25	AC	06/06/2017
07-120-376	MBFINANCIAL BANK	FFCB		5.95%	74,953.13	AC	08/10/2017
07-120-387	MBFINANCIAL BANK	US T-NOTE		4.25%	100,156.15	TN	11/15/2017
07-120-365	MBFINANCIAL BANK	FHLB		5.00%	25,000.00	AC	11/21/2017
07-120-389	MBFINANCIAL BANK	FFCB		4.70%	202,900.00	AC	01/17/2018
07-120-405	MBFINANCIAL BANK	FFCB		4.67%	52,400.00	AC	02/27/2018
07-120-391	MBFINANCIAL BANK	FHLB		4.50%	49,850.00	AC	02/28/2018
07-120-383	MBFINANCIAL BANK	FFCB		4.95%	24,969.25	AC	09/10/2018
07-120-379	MBFINANCIAL BANK	FFCB		5.34%	51,339.50	AC	10/22/2018
07-120-420	MBFINANCIAL BANK	COOK COUNTY 00		4.39%	50,050.00	AC	12/01/2018
07-120-417	MBFINANCIAL BANK	PALATINE II		4.30%	50,000.00	AC	12/01/2018
07-120-382	MBFINANCIAL BANK	COOK COUNTY		5.25%	24,750.00	MB	12/15/2018
07-120-345	MBFINANCIAL BANK	GNMA		5.00%	28,696.00	AC	12/18/2018
07-120-370	MBFINANCIAL BANK	ROUND LAKE		5.70%	99,821.00	MB	01/01/2019
07-120-412	MBFINANCIAL BANK	US TREAS INFL I		2.13%	61,606.41	AC	01/15/2019
07-120-408	MBFINANCIAL BANK	FHLB		4.30%	75,942.60	AC	03/06/2019
07-120-403	MBFINANCIAL BANK	FHLB		4.65%	50,062.50	AC	03/14/2019
07-120-369	MBFINANCIAL BANK	FHLB		5.38%	101,790.00	AC	05/15/2019
07-120-296	MBFINANCIAL BANK	GNMA POOL		4.50%	51,667.51	AC	06/15/2019
07-120-372	MBFINANCIAL BANK	SPORTS AUTHRTY		5.45%	25,153.50	MB	06/15/2019
07-120-306	MBFINANCIAL BANK	FHLB		4.35%	100,468.75	AC	08/05/2019
07-120-364	MBFINANCIAL BANK	FFCB		4.95%	72,869.25	AC	12/16/2019
07-120-400	MBFINANCIAL BANK	CHICAGO IL		6.33%	76,738.50	AC	12/01/2021
07-120-366	MBFINANCIAL BANK	FHLB		5.00%	198,870.00	AC	12/10/2021
07-120-386	MBFINANCIAL BANK	FHLB		5.00%	49,825.50	AC	12/10/2021
07-120-384	MBFINANCIAL BANK	FHLB		5.25%	256,522.75	AC	08/15/2022
07-120-309	MBFINANCIAL BANK	GNMA		8.65%	407.30	AC	07/20/2024
07-120-299	MBFINANCIAL BANK	GNMA		6.00%	14,378.57	AC	08/20/2028

ACCOUNT NUMBER ID. NO.	FINANCIAL INSTITUTION	CERTIFICATE NUMBER	TERM (DAYS)	ANNUAL YIELD	PRINCIPAL	TYPE	MATURE DATE
07-120-359	MBFINANCIAL BANK	HOFFMAN ESTS		5.40%	13,985.55	MB	12/01/2033
	TOTAL INVESTED				$14,935,382.71		
	GRAND TOTAL INVESTED				$14,935,382.71		

VILLAGE OF WILLOWBROOK

PRCT. OF YR: 91.67
RUN: 04/05/10 9:21AM

REVENUE REPORT FOR MARCH, 2010

ACCT. NO.	DESCRIPTION	RECEIVED THIS MONTH	RECEIVED THIS YEAR	BUDGET AMOUNT	PERCENT COLLECTED	BUDGET REMAINING
	GENERAL CORPORATE FUND					
	Operating Revenue					
01-1100	Property Taxes	35.94	154,918.01	149,200.00	103.83	-5,718.01
01-1110	Other Taxes	553,729.97	5,061,988.20	5,736,674.00	88.24	674,685.80
01-1120	Licenses	378.00	102,800.25	108,850.00	94.44	6,049.75
01-1130	Permits	18,444.53	152,143.50	157,000.00	96.91	4,856.50
01-1140	Fines	56,771.85	375,183.13	787,160.00	47.66	411,976.87
01-1150	Transfers-Other Funds	35,606.83	391,675.13	427,282.00	91.67	35,606.87
01-1160	Charges & Fees	9,395.00	52,266.60	45,900.00	113.87	-6,366.60
01-1170	Park & Recreation Revenue	13,803.00	41,656.46	32,055.00	129.95	-9,601.46
01-1180	Other Revenue	7,021.84	322,553.84	419,806.00	76.83	97,252.16
**TOTAL	Operating Revenue	695,186.96	6,655,185.12	7,863,927.00	84.63	1,208,741.88
	Non-Operating Revenue					
01-3000	Non-Operating Revenue	2,760.14	35,786.74	27,750.00	128.96	-8,036.74
**TOTAL	Non-Operating Revenue	2,760.14	35,786.74	27,750.00	128.96	-8,036.74
***TOTAL	GENERAL CORPORATE FUND	697,947.10	6,690,971.86	7,891,677.00	84.79	1,200,705.14

ACCT. NO.	DESCRIPTION	RECEIVED THIS MONTH	RECEIVED THIS YEAR	BUDGET AMOUNT	PERCENT COLLECTED	BUDGET REMAINING
	WATER FUND					
	Operating Revenue					
02-1160	Charges & Fees	131,681.69	1,460,150.91	1,810,240.00	80.66	350,089.09
**TOTAL	Operating Revenue	131,681.69	1,460,150.91	1,810,240.00	80.66	350,089.09
	Non-Operating Revenue					
02-3100	Other Income	370.41	6,703.86	8,700.00	77.06	1,996.14
02-3200	Charges & Fees	600.00	3,400.00	6,300.00	53.97	2,900.00
**TOTAL	Non-Operating Revenue	970.41	10,103.86	15,000.00	67.36	4,896.14
***TOTAL	WATER FUND	132,652.10	1,470,254.77	1,825,240.00	80.55	354,985.23
	HOTEL/MOTEL TAX FUND					
	Operating Revenue					
03-1110	Other Taxes	1,703.68	55,777.01	80,000.00	69.72	24,222.99
03-1160	Charges & Fees	0.00	0.00	0.00	0.00	0.00
03-1180	Other Revenue	0.00	0.00	0.00	0.00	0.00
**TOTAL	Operating Revenue	1,703.68	55,777.01	80,000.00	69.72	24,222.99
	Non-Operating Revenue					
03-3100	Other Income	1.09	5.82	300.00	1.94	294.18
**TOTAL	Non-Operating Revenue	1.09	5.82	300.00	1.94	294.18
	Transfers					
03-4000	Transfers	0.00	0.00	0.00	0.00	0.00
**TOTAL	Transfers	0.00	0.00	0.00	0.00	0.00
***TOTAL	HOTEL/MOTEL TAX FUND	1,704.77	55,782.83	80,300.00	69.47	24,517.17
	MOTOR FUEL TAX FUND					
	Operating Revenue					
04-1110	Other Taxes	16,883.89	206,365.29	240,316.00	85.87	33,950.71
**TOTAL	Operating Revenue	16,883.89	206,365.29	240,316.00	85.87	33,950.71
	Non-Operating Revenue					
04-3100	Other Income	4.31	38.22	500.00	7.64	461.78
**TOTAL	Non-Operating Revenue	4.31	38.22	500.00	7.64	461.78
***TOTAL	MOTOR FUEL TAX FUND	16,888.20	206,403.51	240,816.00	85.71	34,412.49

ACCT. NO.	DESCRIPTION	RECEIVED THIS MONTH	RECEIVED THIS YEAR	BUDGET AMOUNT	PERCENT COLLECTED	BUDGET REMAINING
	T I F SPECIAL REVENUE FUND					
	Operating Revenue					
05-1000	Operating Revenue	0.00	365,360.87	0.00	0.00	-365,360.87
**TOTAL	Operating Revenue	0.00	365,360.87	0.00	0.00	-365,360.87
	Non-Operating Revenue					
05-3100	Other Income	0.56	69.60	0.00	0.00	-69.60
**TOTAL	Non-Operating Revenue	0.56	69.60	0.00	0.00	-69.60
***TOTAL	T I F SPECIAL REVENUE FUND	0.56	365,430.47	0.00	0.00	-365,430.47
	SSA ONE BOND FUND					
	Operating Revenue					
06-1000	Operating Revenue	0.00	326,154.42	322,925.00	101.00	-3,229.42
**TOTAL	Operating Revenue	0.00	326,154.42	322,925.00	101.00	-3,229.42
	Non-Operating Revenue					
06-3000	Non-Operating Revenue	2.81	458.81	1,500.00	30.59	1,041.19
**TOTAL	Non-Operating Revenue	2.81	458.81	1,500.00	30.59	1,041.19
***TOTAL	SSA ONE BOND FUND	2.81	326,613.23	324,425.00	100.67	-2,188.23
	POLICE PENSION FUND					
	Operating Revenue					
07-1150	Transfers-Other Funds	32,350.08	388,200.96	420,551.00	92.31	32,350.04
07-1180	Other Revenue	15,721.89	200,722.26	247,000.00	81.26	46,277.74
**TOTAL	Operating Revenue	48,071.97	588,923.22	667,551.00	88.22	78,627.78
	Non-Operating Revenue					
07-3100	Other Income	59,639.60	371,503.17	380,000.00	97.76	8,496.83
**TOTAL	Non-Operating Revenue	59,639.60	371,503.17	380,000.00	97.76	8,496.83
***TOTAL	POLICE PENSION FUND	107,711.57	960,426.39	1,047,551.00	91.68	87,124.61
	SSA ONE PROJECT FUND					
	Operating Revenue					
08-1000	Operating Revenue	0.00	0.00	0.00	0.00	0.00
**TOTAL	Operating Revenue	0.00	0.00	0.00	0.00	0.00

ACCT. NO.	DESCRIPTION	RECEIVED THIS MONTH	RECEIVED THIS YEAR	BUDGET AMOUNT	PERCENT COLLECTED	BUDGET REMAINING
	Non-Operating Revenue					
08-3000	Non-Operating Revenue	21.58	249.05	840.00	29.65	590.95
**TOTAL	Non-Operating Revenue	21.58	249.05	840.00	29.65	590.95
***TOTAL	SSA ONE PROJECT FUND	21.58	249.05	840.00	29.65	590.95
	WATER CAPITAL IMPROVEMENTS FUND					
	Operating Revenue					
09-1000	Operating Revenue	0.00	0.00	0.00	0.00	0.00
**TOTAL	Operating Revenue	0.00	0.00	0.00	0.00	0.00
	Non-Operating Revenue					
09-3000	Non-Operating Revenue	9.64	265.33	1,560.00	17.01	1,294.67
**TOTAL	Non-Operating Revenue	9.64	265.33	1,560.00	17.01	1,294.67
***TOTAL	WATER CAPITAL IMPROVEMENTS FUND	9.64	265.33	1,560.00	17.01	1,294.67
	CAPITAL PROJECT FUND					
	Operating Revenue					
10-1000	Operating Revenue	0.00	197,585.55	0.00	0.00	-197,585.55
10-1180	Other Revenue	0.00	0.00	0.00	0.00	0.00
**TOTAL	Operating Revenue	0.00	197,585.55	0.00	0.00	-197,585.55
	Non-Operating Revenue					
10-3000	Non-Operating Revenue	114.88	2,843.34	1,000.00	284.33	-1,843.34
**TOTAL	Non-Operating Revenue	114.88	2,843.34	1,000.00	284.33	-1,843.34
***TOTAL	CAPITAL PROJECT FUND	114.88	200,428.89	1,000.00	20,042.89	-199,428.89
	2008 BOND FUND					
	Operating Revenue					
11-1180	Other Revenue	0.00	0.00	0.00	0.00	0.00
**TOTAL	Operating Revenue	0.00	0.00	0.00	0.00	0.00
	Non-Operating Revenue					
11-3000	Non-Operating Revenue	0.00	197,450.19	200,668.00	98.40	3,217.81
**TOTAL	Non-Operating Revenue	0.00	197,450.19	200,668.00	98.40	3,217.81
***TOTAL	2008 BOND FUND	0.00	197,450.19	200,668.00	98.40	3,217.81

VILLAGE OF WILLOWBROOK
REVENUE REPORT FOR MARCH, 2010
RECAP BY FUND

ACCT. NO.	DESCRIPTION	RECEIVED THIS MONTH	RECEIVED THIS YEAR	BUDGET AMOUNT	PERCENT COLLECTED	BUDGET REMAINING
	FUND SUMMARY					
1	GENERAL CORPORATE	697,947.10	6,690,971.86	7,891,677.00	84.79	1,200,705.14
2	WATER	132,652.10	1,470,254.77	1,825,240.00	80.55	354,985.23
3	HOTEL/MOTEL TAX	1,704.77	55,782.83	80,300.00	69.47	24,517.17
4	MOTOR FUEL TAX	16,888.20	206,403.51	240,816.00	85.71	34,412.49
5	T I F SPECIAL REVENUE	0.56	365,430.47	0.00	0.00	-365,430.47
6	SSA ONE BOND & INTEREST	2.81	326,613.23	324,425.00	100.67	-2,188.23
7	POLICE PENSION	107,711.57	960,426.39	1,047,551.00	91.68	87,124.61
8	SSA ONE PROJECT	21.58	249.05	840.00	29.65	590.95
9	WATER CAPITAL IMPROVEMENTS	9.64	265.33	1,560.00	17.01	1,294.67
10	CAPITAL PROJECT	114.88	200,428.89	1,000.00	20,042.89	-199,428.89
11	2008 BOND	0.00	197,450.19	200,668.00	98.40	3,217.81
	TOTALS ALL FUNDS	957,053.21	10,474,276.52	11,614,077.00	90.19	1,139,800.48

VILLAGE OF WILLOWBROOK
EXPENDITURE REPORT FOR MARCH, 2010
GENERAL CORPORATE FUND

ACCT. NO.	DESCRIPTION	EXPENDED THIS MONTH	EXPENDED THIS YEAR	PRCT. BUDGET	WORKING BUDGET	BUDGET REMAINING	PRCT. APPROP.	APPROP.
	VILLAGE BOARD & CLERK							
01-05-410-3	GENERAL MANAGEMENT	3,614.80	30,200.31	71.64	42,154.00	11,953.69	35.82	84,308.00
01-05-420-3	COMMUNITY RELATIONS	0.00	14,796.51	102.04	14,500.00	-296.51	51.02	29,000.00
01-05-425-6	CAPITAL IMPROVEMENTS	0.00	0.00	0.00	0.00	0.00	0.00	0.00
01-05-430-7	CONTINGENCIES	0.00	0.00	0.00	0.00	0.00	0.00	0.00
**TOTAL	VILLAGE BOARD & CLERK	3,614.80	44,996.82	79.42	56,654.00	11,657.18	39.71	113,308.00
	BOARD OF POLICE COMMISSIONERS							
01-07-435-3	ADMINISTRATION	0.00	1,150.50	9.02	12,750.00	11,599.50	4.51	25,500.00
01-07-440-5	OTHER	0.00	0.00	0.00	4,500.00	4,500.00	0.00	9,000.00
01-07-445-7	CONTINGENCIES	0.00	0.00	0.00	0.00	0.00	0.00	0.00
**TOTAL	BOARD OF POLICE COMMISSIONERS	0.00	1,150.50	6.67	17,250.00	16,099.50	3.33	34,500.00
	ADMINISTRATION							
01-10-455-5	GENERAL MANAGEMENT	16,771.32	498,584.38	84.18	592,284.00	93,699.62	42.09	1,184,568.00
01-10-460-3	DATA PROCESSING	109.90	20,925.73	82.71	25,300.00	4,374.27	41.36	50,600.00
01-10-461-1	LEGISLATIVE SUPPORT	0.00	0.00	0.00	0.00	0.00	0.00	0.00
01-10-465-2	ADMINISTRATION-GENERAL ENGINEERING	0.00	0.00	0.00	0.00	0.00	0.00	0.00
01-10-466-3	BUILDINGS	6,595.15	47,664.17	84.43	56,455.00	8,790.83	42.21	112,910.00
01-10-470-2	LEGAL SERVICES	6,025.00	123,309.69	98.06	125,750.00	2,440.31	49.03	251,500.00
01-10-471-2	FINANCIAL AUDIT	13,483.00	63,095.79	3,605.47	1,750.00	-61,345.79	1,802.74	3,500.00
01-10-475-3	COMMUNITY RELATIONS	1,616.25	11,132.39	45.13	24,670.00	13,537.61	22.56	49,340.00
01-10-480-2	RISK MANAGEMENT	955.70	198,035.21	96.65	204,900.00	6,864.79	48.32	409,800.00
01-10-485-6	CAPITAL IMPROVEMENTS	0.00	12,302.67	73.69	16,695.00	4,392.33	36.85	33,390.00
01-10-490-7	CONTINGENCIES	0.00	0.00	0.00	0.00	0.00	0.00	0.00
**TOTAL	ADMINISTRATION	45,556.32	975,050.03	93.06	1,047,804.00	72,753.97	46.53	2,095,608.00
	PLANNING & ECONOMIC DEVELOPMENT							
01-15-510-4	GENERAL MANAGEMENT	13,620.39	118,692.69	90.53	131,109.00	12,416.31	45.26	262,218.00
01-15-515-4	DATA PROCESSING	0.00	0.00	0.00	2,500.00	2,500.00	0.00	5,000.00
01-15-520-2	ENGINEERING	559.30	8,467.04	29.76	28,450.00	19,982.96	14.88	56,900.00
01-15-535-2	RISK MANAGEMENT	0.00	0.00	0.00	2,500.00	2,500.00	0.00	5,000.00
01-15-540-6	CAPITAL IMPROVEMENTS	0.00	591.12	99.85	592.00	0.88	49.93	1,184.00
01-15-544-7	CONTINGENCIES	0.00	0.00	0.00	0.00	0.00	0.00	0.00
**TOTAL	PLANNING & ECONOMIC DEVELOPMENT	14,179.69	127,750.85	77.35	165,151.00	37,400.15	38.68	330,302.00
	PARKS & RECREATION DEPT							
01-20-550-3	ADMINISTRATION	4,934.41	79,565.24	83.28	95,536.00	15,970.76	41.64	191,072.00
01-20-555-3	PARKS & RECREATION-ADMINISTRATION	0.00	0.00	0.00	0.00	0.00	0.00	0.00
01-20-560-2	ADMINISTRATION	0.00	0.00	0.00	2,500.00	2,500.00	0.00	5,000.00
01-20-565-3	LANDSCAPING	1,050.00	68,661.18	78.89	87,035.00	18,373.82	39.44	174,070.00
01-20-570-4	MAINTENANCE	4.67	27,912.53	75.27	37,085.00	9,172.47	37.63	74,170.00
01-20-575-5	SUMMER PROGRAM	4,000.00	12,517.36	82.51	15,170.00	2,652.64	41.26	30,340.00
01-20-580-5	FALL PROGRAM	5,140.00	9,860.95	134.62	7,325.00	-2,535.95	67.31	14,650.00
01-20-585-5	WINTER PROGRAM	6,155.50	11,764.60	70.96	16,580.00	4,815.40	35.48	33,160.00
01-20-590-5	SPECIAL RECREATION SERVICES	0.00	31,780.86	72.36	43,920.00	12,139.14	36.18	87,840.00
01-20-595-6	CAPITAL IMPROVEMENTS	0.00	73,625.06	92.07	79,965.00	6,339.94	46.04	159,930.00
01-20-599-7	CONTINGENCIES	0.00	0.00	0.00	0.00	0.00	0.00	0.00
**TOTAL	PARKS & RECREATION DEPT	21,284.58	315,687.78	81.97	385,116.00	69,428.22	40.99	770,232.00
	FINANCE DEPARTMENT							
01-25-610-4	GENERAL MANAGEMENT	20,019.25	240,888.99	89.11	270,322.00	29,433.01	44.56	540,644.00

VILLAGE OF WILLOWBROOK
EXPENDITURE REPORT FOR MARCH, 2010
GENERAL CORPORATE FUND

ACCT. NO.	DESCRIPTION	EXPENDED THIS MONTH	EXPENDED THIS YEAR	PRCT. BUDGET	WORKING BUDGET	BUDGET REMAINING	PRCT. APPROP.	APPROP.
01-25-615-3	DATA PROCESSING	0.00	29,132.35	79.51	36,640.00	7,507.65	39.75	73,280.00
01-25-620-2	FINANCIAL AUDIT	0.00	19,591.00	91.37	21,441.00	1,850.00	45.69	42,882.00
01-25-625-6	CAPITAL IMPROVEMENTS	0.00	1,873.92	141.32	1,326.00	-547.92	70.66	2,652.00
01-25-629-7	CONTINGENCIES	0.00	0.00	0.00	0.00	0.00	0.00	0.00
**TOTAL	FINANCE DEPARTMENT	20,019.25	291,486.26	88.40	329,729.00	38,242.74	44.20	659,458.00
	POLICE DEPARTMENT							
01-30-630-4	ADMINISTRATION	374,170.18	3,643,550.90	84.55	4,309,372.00	665,821.10	42.27	8,618,744.00
01-30-635-2	BLDG - CONSTRUCTION REMODELING	0.00	0.00	0.00	0.00	0.00	0.00	0.00
01-30-640-4	DATA PROCESSING	250.00	3,597.00	39.97	9,000.00	5,403.00	19.98	18,000.00
01-30-645-2	RISK MANAGEMENT	0.00	2,946.66	23.57	12,500.00	9,553.34	11.79	25,000.00
01-30-650-4	PATROL SERVICES	47.96	1,233.12	32.88	3,750.00	2,516.88	16.44	7,500.00
01-30-655-4	INVESTIGATIVE SERVICES	0.00	76.14	6.09	1,250.00	1,173.86	3.05	2,500.00
01-30-660-3	TRAFFIC SAFETY	476.60	4,007.33	77.89	5,145.00	1,137.67	38.94	10,290.00
01-30-665-2	E S D A COORDINATOR	0.00	540.75	103.00	525.00	-15.75	51.50	1,050.00
01-30-670-3	CRIME PREVENTION	329.21	6,586.79	76.59	8,600.00	2,013.21	38.30	17,200.00
01-30-675-4	TELECOMMUNICATIONS	21,645.66	238,102.26	91.40	260,500.00	22,397.74	45.70	521,000.00
01-30-680-6	CAPITAL IMPROVEMENTS	26,630.00	67,713.85	46.91	144,342.00	76,628.15	23.46	288,684.00
01-30-685-7	CONTINGENCIES	0.00	0.00	0.00	0.00	0.00	0.00	0.00
**TOTAL	POLICE DEPARTMENT	423,549.61	3,968,354.80	83.46	4,754,984.00	786,629.20	41.73	9,509,968.00
	PUBLIC WORKS DEPARTMENT							
01-35-710-4	ADMINISTRATION	20,045.33	250,100.58	93.60	267,197.00	17,096.42	46.80	534,394.00
01-35-715-4	EDP	136.97	1,693.75	44.34	3,820.00	2,126.25	22.17	7,640.00
01-35-720-2	ENGINEERING	0.00	62,282.80	98.23	63,405.00	1,122.20	49.12	126,810.00
01-35-725-4	BUILDINGS	184.98	4,252.58	85.05	5,000.00	747.42	42.53	10,000.00
01-35-730-2	RISK MANAGEMENT	0.00	5,000.00	0.00	0.00	-5,000.00	0.00	0.00
01-35-735-4	EQUIPMENT REPAIR	513.74	11,655.48	62.64	18,606.00	6,950.52	31.32	37,212.00
01-35-740-3	SNOW REMOVAL	19,183.22	59,223.60	115.76	51,160.00	-8,063.60	57.88	102,320.00
01-35-745-2	STREET LIGHTING	1,987.38	22,032.09	81.88	26,908.00	4,875.91	40.94	53,816.00
01-35-750-3	STORM WATER IMPROVEMENTS	2,907.25	84,104.31	53.13	158,302.00	74,197.69	26.56	316,604.00
01-35-755-4	STREET MAINTENANCE	404.60	137,506.07	86.89	158,258.00	20,751.93	43.44	316,516.00
01-35-760-2	NUSIANCE CONTROL	0.00	27,277.84	90.23	30,231.00	2,953.16	45.11	60,463.00
01-35-765-6	CAPITAL IMPROVEMENTS	0.00	864.78	1.22	70,866.00	70,001.22	0.61	141,732.00
01-35-770-7	CONTINGENCIES	0.00	0.00	0.00	0.00	0.00	0.00	0.00
**TOTAL	PUBLIC WORKS DEPARTMENT	45,363.47	665,993.88	78.01	853,753.00	187,759.12	39.00	1,707,507.00
	BUILDING AND ZONING DEPT							
01-40-810-4	GENERAL MANAGEMENT	10,684.04	127,467.21	83.54	152,590.00	25,122.79	41.77	305,180.00
01-40-815-4	EDP	0.00	0.00	0.00	2,800.00	2,800.00	0.00	5,600.00
01-40-820-2	ENGINEERING	1,845.78	37,015.47	48.18	76,821.00	39,805.53	24.09	153,642.00
01-40-825-2	RISK MANAGEMENT	0.00	0.00	0.00	0.00	0.00	0.00	0.00
01-40-830-1	INSPECTION SERVICES	2,551.00	22,916.25	61.42	37,313.00	14,396.75	30.71	74,626.00
01-40-835-6	CAPITAL IMPROVEMENTS	0.00	882.62	102.27	863.00	-19.62	51.14	1,726.00
01-40-840-7	CONTINGENCIES	0.00	0.00	0.00	0.00	0.00	0.00	0.00
**TOTAL	BUILDING AND ZONING DEPT	15,080.82	188,281.55	69.63	270,387.00	82,105.45	34.82	540,774.00
	PLAN COMMISSION							
01-45-845-1	PERSONAL SERVICES	0.00	0.00	0.00	0.00	0.00	0.00	0.00
01-45-846-3	ADMINISTRATION	0.00	0.00	0.00	0.00	0.00	0.00	0.00
01-45-847-3	HEARINGS	0.00	0.00	0.00	0.00	0.00	0.00	0.00

VILLAGE OF WILLOWBROOK
EXPENDITURE REPORT FOR MARCH, 2010
GENERAL CORPORATE FUND

ACCT. NO.	DESCRIPTION	EXPENDED THIS MONTH	EXPENDED THIS YEAR	PRCT. BUDGET	WORKING BUDGET	BUDGET REMAINING	PRCT. APPROP.	APPROP.
01-45-848-2	PLANNING	0.00	0.00	0.00	0.00	0.00	0.00	0.00
01-45-849-7	CONTINGENCIES	0.00	0.00	0.00	0.00	0.00	0.00	0.00
**TOTAL	PLAN COMMISSION	0.00	0.00	0.00	0.00	0.00	0.00	0.00
***TOTAL	GENERAL CORPORATE FUND	588,648.54	6,578,752.47	83.48	7,880,828.00	1,302,075.53	41.74	15,761,657.00

VILLAGE OF WILLOWBROOK
EXPENDITURE REPORT FOR MARCH, 2010
WATER FUND

ACCT. NO.	DESCRIPTION	EXPENDED THIS MONTH	EXPENDED THIS YEAR	PRCT. BUDGET	WORKING BUDGET	BUDGET REMAINING	PRCT. APPROP.	APPROP.
	WATER DEPARTMENT							
02-50-401-4	ADMINISTRATION	19,142.16	248,268.42	90.37	274,716.00	26,447.58	45.19	549,432.00
02-50-405-2	ENGINEERING	0.00	1,594.46	30.96	5,150.00	3,555.54	15.48	10,300.00
02-50-410-5	INTERFUND TRANSFERS	35,606.83	455,889.13	92.76	491,496.00	35,606.87	46.38	982,992.00
02-50-415-2	RISK MANAGEMENT	0.00	0.00	0.00	0.00	0.00	0.00	0.00
02-50-417-4	EDP	3,044.37	9,789.85	63.67	15,375.00	5,585.15	31.84	30,750.00
02-50-420-5	WATER PRODUCTION	47,332.19	553,905.82	77.64	713,408.00	159,502.18	38.82	1,426,816.00
02-50-425-4	WATER STORAGE	179.80	4,619.08	107.42	4,300.00	-319.08	53.71	8,600.00
02-50-430-4	TRANSPORTATION & DISTRIBUTION	1,774.73	30,935.51	36.94	83,755.00	52,819.49	18.47	167,510.00
02-50-435-4	METERS & BILLING	0.00	14,659.51	83.25	17,610.00	2,950.49	41.62	35,220.00
02-50-440-6	CAPITAL IMPROVEMENTS	0.00	1,288.27	3.41	37,790.00	36,501.73	1.70	75,580.00
02-50-449-7	CONTINGENCIES-DEBT SERVICE	0.00	167,548.75	100.00	167,549.00	0.25	50.00	335,098.00
**TOTAL	WATER DEPARTMENT	107,080.08	1,488,498.80	82.19	1,811,149.00	322,650.20	41.09	3,622,298.00
***TOTAL	WATER FUND	107,080.08	1,488,498.80	82.19	1,811,149.00	322,650.20	41.09	3,622,298.00

VILLAGE OF WILLOWBROOK
EXPENDITURE REPORT FOR MARCH, 2010
HOTEL/MOTEL TAX FUND

ACCT. NO.	DESCRIPTION	EXPENDED THIS MONTH	EXPENDED THIS YEAR	PRCT. BUDGET	WORKING BUDGET	BUDGET REMAINING	PRCT. APPROP.	APPROP.
	HOTEL/MOTEL							
03-53-401-4	ADMINISTRATION	2,000.00	11,020.79	68.45	16,100.00	5,079.21	34.23	32,200.00
03-53-435-3	PUBLIC RELATIONS & PROMOTION	479.78	17,983.39	28.45	63,200.00	45,216.61	14.23	126,400.00
03-53-436-3	SPECIAL EVENTS	0.00	1,451.98	24.20	6,000.00	4,548.02	12.10	12,000.00
03-53-449-7	CONTINGENCIES	0.00	0.00	0.00	0.00	0.00	0.00	0.00
**TOTAL	HOTEL/MOTEL	2,479.78	30,456.16	35.70	85,300.00	54,843.84	17.85	170,600.00
***TOTAL	HOTEL/MOTEL TAX FUND	2,479.78	30,456.16	35.70	85,300.00	54,843.84	17.85	170,600.00

VILLAGE OF WILLOWBROOK
EXPENDITURE REPORT FOR MARCH, 2010
MOTOR FUEL TAX FUND

ACCT. NO.	DESCRIPTION	EXPENDED THIS MONTH	EXPENDED THIS YEAR	PRCT. BUDGET	WORKING BUDGET	BUDGET REMAINING	PRCT. APPROP.	APPROP.
	MOTOR FUEL TAX							
04-56-401-3	PAVEMENT MARKINGS	0.00	0.00	0.00	0.00	0.00	0.00	0.00
04-56-405-3	ROAD SERVICES	0.00	0.00	0.00	0.00	0.00	0.00	0.00
04-56-410-3	SNOW REMOVAL	0.00	0.00	0.00	0.00	0.00	0.00	0.00
04-56-415-2	STREET LIGHTING	0.00	0.00	0.00	0.00	0.00	0.00	0.00
04-56-420-2	TRAFFIC SIGNALS	0.00	0.00	0.00	0.00	0.00	0.00	0.00
04-56-425-3	STREET MAINTENANCE	0.00	0.00	0.00	0.00	0.00	0.00	0.00
04-56-430-6	CAPITAL IMPROVEMENTS	0.00	100,869.45	88.10	114,500.00	13,630.55	44.05	229,000.00
04-56-439-7	CONTINGENCIES	0.00	0.00	0.00	0.00	0.00	0.00	0.00
**TOTAL	MOTOR FUEL TAX	0.00	100,869.45	88.10	114,500.00	13,630.55	44.05	229,000.00
***TOTAL	MOTOR FUEL TAX FUND	0.00	100,869.45	88.10	114,500.00	13,630.55	44.05	229,000.00

VILLAGE OF WILLOWBROOK
EXPENDITURE REPORT FOR MARCH, 2010
T I F SPECIAL REVENUE FUND

ACCT. NO.	DESCRIPTION	EXPENDED THIS MONTH	EXPENDED THIS YEAR	PRCT. BUDGET	WORKING BUDGET	BUDGET REMAINING	PRCT. APPROP.	APPROP.
05-59-401-3	ADMINISTRATION - GENERAL	0.00	115,451.03	0.00	0.00	-115,451.03	0.00	0.00
05-59-410-5	PRINCIPAL EXPENSE	0.00	238,420.96	0.00	0.00	-238,420.96	0.00	0.00
05-59-425-2	ATTORNEY FEES	0.00	1,050.00	0.00	0.00	-1,050.00	0.00	0.00
***TOTAL	T I F SPECIAL REVENUE FUND	0.00	354,921.99	0.00	0.00	-354,921.99	0.00	0.00

VILLAGE OF WILLOWBROOK
EXPENDITURE REPORT FOR MARCH, 2010
SSA ONE BOND FUND

ACCT. NO.	DESCRIPTION	EXPENDED THIS MONTH	EXPENDED THIS YEAR	PRCT. BUDGET	WORKING BUDGET	BUDGET REMAINING	PRCT. APPROP.	APPROP.
	SSA BOND							
06-60-550-4	DEBT SERVICE	0.00	322,925.00	100.00	322,925.00	0.00	50.00	645,850.00
06-60-555-7	SSA BOND & INTEREST FUND	0.00	0.00	0.00	0.00	0.00	0.00	0.00
**TOTAL	SSA BOND	0.00	322,925.00	100.00	322,925.00	0.00	50.00	645,850.00
***TOTAL	SSA ONE BOND FUND	0.00	322,925.00	100.00	322,925.00	0.00	50.00	645,850.00

VILLAGE OF WILLOWBROOK
EXPENDITURE REPORT FOR MARCH, 2010
POLICE PENSION FUND

ACCT. NO.	DESCRIPTION	EXPENDED THIS MONTH	EXPENDED THIS YEAR	PRCT. BUDGET	WORKING BUDGET	BUDGET REMAINING	PRCT. APPROP.	APPROP.
07-62-401-5	POLICE PENSION FUND	21,042.87	179,433.48	104.29	172,059.00	-7,374.48	52.14	344,118.00
***TOTAL	POLICE PENSION FUND	21,042.87	179,433.48	104.29	172,059.00	-7,374.48	52.14	344,118.00

VILLAGE OF WILLOWBROOK
EXPENDITURE REPORT FOR MARCH, 2010
SSA ONE PROJECT FUND

ACCT. NO.	DESCRIPTION	EXPENDED THIS MONTH	EXPENDED THIS YEAR	PRCT. BUDGET	WORKING BUDGET	BUDGET REMAINING	PRCT. APPROP.	APPROP.
	BUILDING AND ZONING DEPT							
08-40-401-9	SSA FUND ONE PROJECT FUND	0.00	0.00	0.00	0.00	0.00	0.00	0.00
**TOTAL	BUILDING AND ZONING DEPT	0.00	0.00	0.00	0.00	0.00	0.00	0.00
	SSA ONE PROJECT							
08-63-401-9	SSA FUND ONE PROJECT FUND	0.00	0.00	0.00	0.00	0.00	0.00	0.00
08-63-445-6	PUBLIC IMPROVEMENTS	0.00	0.00	0.00	51,200.00	51,200.00	0.00	102,400.00
08-63-555-7	SSA ONE PROJECT FUND	0.00	0.00	0.00	0.00	0.00	0.00	0.00
**TOTAL	SSA ONE PROJECT	0.00	0.00	0.00	51,200.00	51,200.00	0.00	102,400.00
***TOTAL	SSA ONE PROJECT FUND	0.00	0.00	0.00	51,200.00	51,200.00	0.00	102,400.00

VILLAGE OF WILLOWBROOK
EXPENDITURE REPORT FOR MARCH, 2010
WATER CAPITAL IMPROVEMENTS FUND

ACCT. NO.	DESCRIPTION	EXPENDED THIS MONTH	EXPENDED THIS YEAR	PRCT. BUDGET	WORKING BUDGET	BUDGET REMAINING	PRCT. APPROP.	APPROP.
	WATER CAPITAL IMPROVEMENTS							
09-65-405-2	WATER CAPITAL IMPROV FUND	0.00	7,599.29	0.00	0.00	-7,599.29	0.00	0.00
09-65-410-5	INTERFUND TRANSFERS	0.00	0.00	0.00	0.00	0.00	0.00	0.00
09-65-440-6	CAPITAL IMPROVEMENTS	0.00	108,312.65	77.37	140,000.00	31,687.35	38.68	280,000.00
**TOTAL	WATER CAPITAL IMPROVEMENTS	0.00	115,911.94	82.79	140,000.00	24,088.06	41.40	280,000.00
***TOTAL	WATER CAPITAL IMPROVEMENTS FUND	0.00	115,911.94	82.79	140,000.00	24,088.06	41.40	280,000.00

VILLAGE OF WILLOWBROOK
EXPENDITURE REPORT FOR MARCH, 2010
CAPITAL PROJECT FUND

ACCT. NO.	DESCRIPTION	EXPENDED THIS MONTH	EXPENDED THIS YEAR	PRCT. BUDGET	WORKING BUDGET	BUDGET REMAINING	PRCT. APPROP.	APPROP.
	CAPITAL PROJECTS							
10-68-430-5	CAPITAL PROJECTS FUND	0.00	133,236.19	97.64	136,454.00	3,217.81	48.82	272,908.00
10-68-540-4	PUBLIC WORKS FACILITY ARCHITECT FEES	1,556.96	755,440.12	75.58	999,547.00	244,106.88	37.79	1,999,094.00
10-68-545-4	75TH ST EXTENSION PROJECT	0.00	15,311.92	0.00	0.00	-15,311.92	0.00	0.00
10-68-550-4	DEBT SERVICE	0.00	0.00	0.00	0.00	0.00	0.00	0.00
**TOTAL	CAPITAL PROJECTS	1,556.96	903,988.23	79.58	1,136,001.00	232,012.77	39.79	2,272,002.00
***TOTAL	CAPITAL PROJECT FUND	1,556.96	903,988.23	79.58	1,136,001.00	232,012.77	39.79	2,272,002.00

VILLAGE OF WILLOWBROOK
EXPENDITURE REPORT FOR MARCH, 2010
2008 BOND FUND

ACCT. NO.	DESCRIPTION	EXPENDED THIS MONTH	EXPENDED THIS YEAR	PRCT. BUDGET	WORKING BUDGET	BUDGET REMAINING	PRCT. APPROP.	APPROP.
**TOTAL	2008 BOND FUND	0.00	200,668.00	100.00	200,668.00	0.00	50.00	401,336.00
***TOTAL	2008 BOND FUND	0.00	200,668.00	100.00	200,668.00	0.00	50.00	401,336.00
	FUND SUMMARY							
1	GENERAL CORPORATE	588,648.54	6,578,752.47	83.48	7,880,828.00	1,302,075.53	41.74	15,761,657.00
2	WATER	107,080.08	1,488,498.80	82.19	1,811,149.00	322,650.20	41.09	3,622,298.00
3	HOTEL/MOTEL TAX	2,479.78	30,456.16	35.70	85,300.00	54,843.84	17.85	170,600.00
4	MOTOR FUEL TAX	0.00	100,869.45	88.10	114,500.00	13,630.55	44.05	229,000.00
5	T I F SPECIAL REVENUE	0.00	354,921.99	0.00	0.00	-354,921.99	0.00	0.00
6	SSA ONE BOND & INTEREST	0.00	322,925.00	100.00	322,925.00	0.00	50.00	645,850.00
7	POLICE PENSION	21,042.87	179,433.48	104.29	172,059.00	-7,374.48	52.14	344,118.00
8	SSA ONE PROJECT	0.00	0.00	0.00	51,200.00	51,200.00	0.00	102,400.00
9	WATER CAPITAL IMPROVEMENTS	0.00	115,911.94	82.79	140,000.00	24,088.06	41.40	280,000.00
10	CAPITAL PROJECT	1,556.96	903,988.23	79.58	1,136,001.00	232,012.77	39.79	2,272,002.00
11	2008 BOND	0.00	200,668.00	100.00	200,668.00	0.00	50.00	401,336.00
	TOTALS ALL FUNDS	720,808.23	10,276,425.52	86.25	11,914,630.00	1,638,204.48	43.13	23,829,261.00

VILLAGE OF WILLOWBROOK
FINANCIAL REPORT
MUNICIPAL SALES AND USE TAXES

MONTH DIST	SALE MADE	05-06	06-07	07-08	08-09	09-10
				MONTH FISCAL YEAR		
MAY	FEB	$198,104	$182,680	$196,248	$230,603	$216,102
JUNE	MAR	$202,486	$211,605	$212,513	$254,996	$252,558
JULY	APR	$194,433	$244,002	$218,275	$250,123	$239,611
AUG	MAY	$215,043	$260,808	$256,375	$303,260	$278,006
SEPT	JUNE	$222,211	$254,830	$270,220	$294,396	$284,544
OCT	JULY	$219,400	$236,588	$231,584	$277,421	$269,750
NOV	AUG	$207,764	$232,607	$231,838	$265,822	$267,033
DEC	SEPT	$221,199	$238,039	$229,820	$263,557	$253,713
JAN	OCT	$198,456	$215,032	$233,691	$238,194	$236,393
FEB	NOV	$211,512	$234,989	$258,730	$290,210	$253,516
MARCH	DEC	$305,179	$279,998	$344,175	$313,051	$339,177
APRIL	JAN	$172,041	$207,236	$224,731	$216,559	
TOTAL		$2,567,829	$2,798,415	$2,908,200	$3,198,192	$2,890,404
MONTHLY AVE		$213,986	$233,201	$242,350	$266,516	$262,764

YEAR TO DATE LAST YEAR :	$2,981,633
YEAR TO DATE THIS YEAR :	$2,890,404
DIFFERENCE :	($91,229)
PERCENTAGE OF DECREASE :	-3.06%

CURRENT FISCAL YEAR :

BUDGETED REVENUE:	$3,018,750
PERCENTAGE OF YEAR COMPLETED :	91.67%
PERCENTAGE OF REVENUE TO DATE :	95.75%
PROJECTION OF ANNUAL REVENUE :	$3,100,337
EST. DOLLAR DIFF ACTUAL TO BUDGET	$81,587
EST. PERCENT DIFF ACTUAL TO BUDGET	2.7%

04/05/2010

The Village of WILLOWBROOK

7760 Quincy Street • Willowbrook, Illinois 60527-5594 • Phone: (630) 323-8215 • Fax: (630) 323-0787

Village President

Robert A. Napoli

Village Clerk

Leroy R. Hansen

Village Trustees

Dennis Baker

Terrence Kelly

Timothy McMahon

Michael Mistele

Sandra O'Connor

Paul Schoenbeck

APPLICATION FOR LICENSE TO HOLD A RAFFLE

1. Name, age and address of the applicant in the case of an individual or in such other case of the duly authorized representative of the applicant, the date of incorporation of any corporation, the date of formation of any other organization, the object for which an organization or corporation was formed, the names and addresses of the officers and directors of any organization or corporation.

Name	Address	Age
Teen Parent Connection	739 Roosevelt St Glen Ellyn, IL 60137	25 years

Date of incorporation, if corporation: Ø

Date of formation of organization: July, 1985

Object for which organization or corporation was formed: to serve the community through education on the realities + responsibilities of teenage pregnancy through long-term assistance to adolescent parents for their development of parenting skills + self-sufficiency.

2. The area or areas within the Village in which raffle chances will be sold or issued and the time period during which raffle chances will be sold or issued.

March - April 2010, DuPage County

3. The date on which the drawing is to be held

April 23, 2010

4. The place at which the drawing is to be held.

Ashton Place, Willowbrook, IL (341 75th St)

5. Has the applicant ever been convicted of a felony and been disqualified to receive a license by reason of any matter or thing contained in Chapter 3-17 of the Village of Willowbrook Code of Ordinances, laws of the State or of the United States of America.

Yes: _____ No: X

If yes, explain: _____

6. The aggregate retail value of all prizes or merchandise awarded by the licensee in a single raffle.

$5,000

7. The maximum retail value of each prize awarded by the licensee in a single raffle.

$1,000 first prize
$500 2nd prize
$250 3rd prize
$3,000+ for fur coat prize

8. The maximum price which may be charged for each raffle chance issued or sold.

$5 per ticket or 5 tickets for $20 - cash raffle
$15 per ticket or 2 tix for $20 - fur coat

9. Has a previous license issued by any state or subdivision thereof or by the Federal government ever been revoked:

Yes: _____ No: X

If yes, state reasons: _____

10. Affirm that the applicant will not violate any of the laws of the State or of the United States or any ordinances of this Village in the conduct of raffles.

We will not violate any of the laws in the conduct of our raffle

11. Affirm that the applicant will not allow gambling devices or gambling on the premises where the drawing will be held.
We will not allow gambling or gambling devices.

12. Attach a sworn statement attesting to the not-for-profit character of the prospective licensee organization signed by the presiding office and secretary of that organization.

Signature: Mary Beth Kraft

Date 3/22/10

Teen Parent CONNECTION

Parenting, Prevention, Progress

March 22, 2010

Village of Willowbrook
7760 Quincy Street
Willowbrook, IL 60521

To Whom It May Concern:

I, _Renee Beall_____and ___Elizabeth Sexton_____ so affirm that Teen Parent Connection, Inc. is recognized by the Internal Revenue System as a 501 (c)(3) not-for-profit organization.

Renie Beall

Renee Beall
Board President

3/22/10
Date

E Sexton

Honorable Elizabeth Sexton
Judge, 18th Judicial Circuit Court
Board Secretary

3/22/10
Date

KATHERINE A. PATERNO, Esq.

7420 COUNTY LINE ROAD, BURR RIDGE, ILLINOIS 60527
TEL (630) 325 0883 FAX (630) 325.0883

March 11, 2010

HAND DELIVERED

President and Board of Trustees
Village of Willowbrook
7760 Quincy Street
Willowbrook, Illinois 60527

RE: Resignation as Ethical Officer for Village of Willowbrook

Dear President and Members of the Village Board of Trustees:

Please be advised that I resign as the Ethics Officer for the Village of Willowbrook, effective immediately. I thank the President and the Members of the Board for their confidence in my abilities and the opportunity to serve.

Sincerely,

Katherine A. Paterno
Village of Willowbrook
Ethics Officer

RESOLUTION NO. 10-R-11

A RESOLUTION OPPOSING
REDUCTION OF LOCAL GOVERNMENT DISTRIBUTIVE FUND

WHEREAS, Illinois municipalities are currently experiencing a tremendous decline in revenues during this great recession; and

WHEREAS, municipalities are in fiscal turmoil and struggling to provide the vital services expected by citizens; and

WHEREAS, Illinois taxpayers live in municipalities throughout the state and contribute income tax of which 90% goes to the state and 10% goes to municipal services; and

WHEREAS, Governor Quinn proposed in his March 10, 2010 budget address to withhold 30% of this shared revenue keeping $300 million of that for the state budget; and

WHEREAS, this proposed withholding of municipal revenue will cost each municipality $23.10 per resident, which could be used to provide services the local taxpayer needs; and

WHEREAS, this reduction compounds on the state's late payments of Local Government Distributive Fund amounts to municipalities by three months—currently owing the Village of Willowbrook $173,100; and

WHEREAS, local taxpayers deserve to have these tax dollars returned to their communities to pay for local community employees, to provide local community services and to not see local tax increases;

NOW THEREFORE BE IT RESOLVED BY THE VILLAGE OF WILLOWBROOK, AS FOLLOWS:

SECTION 1: The Village of Willowbrook, Illinois strongly opposes any reduction of the Local Government Distributive Fund due municipalities and demands the 10% be kept whole.

SECTION 2: The Village of Willowbrook, Illinois requests every Senator and Representative to reject this diminution of desperately needed revenue due municipalities.

SECTION 3: The Village of Willowbrook, Illinois would experience over $200,000 in lost revenue from this measure—forcing it to make budget cuts and alter current service provision.

SECTION 4: The Clerk is hereby directed to send copies of this Resolution to Governor Quinn, the legislative leaders of both chambers of the Illinois General Assembly and members representing this municipality.

ADOPTED and APPROVED this _____ day of _____, 2010.

_____
Village President

ATTEST:

_____
Village Clerk

ROLL CALL VOTE: AYES:_____

NAYS:_____

ABSTENTIONS:_____

ABSENT:_____

VILLAGE OF WILLOWBROOK

BOARD MEETING

AGENDA ITEM - HISTORY/COMMENTARY

ITEM TITLE: A RESOLUTION AUTHORIZING THE VILLAGE PRESIDENT AND VILLAGE CLERK TO EXECUTE A CERTAIN AGREEMENT – DUPAGE CONVENTION & VISITORS BUREAU

AGENDA NO. 7n

AGENDA DATE: 4/12/10

STAFF REVIEW: Sue Stanish **SIGNATURE:** Sue Stanish

LEGAL REVIEW: William Hennessy, Village Attorney **SIGNATURE:** N/A

RECOMMENDED BY VILLAGE ADMIN.: **SIGNATURE:** Megan E. Price

REVIEWED & APPROVED BY COMMITTEE: YES ☐ NO ☐ N/A ☒

ITEM HISTORY (PREVIOUS VILLAGE BOARD REVIEWS, ACTIONS RELATED TO THIS ITEM, OTHER PERTINENT HISTORY)

The 1% Hotel/Motel Tax generates funds that can be used to promote tourism and marketing within the Village of Willowbrook. The Hotel/Motel Tax Advisory Committee is comprised of the Chairman of the Finance/Administration Committee, a representative from each of the four hotels in Willowbrook and a member from the Willowbrook/Burr Ridge Chamber of Commerce. For the past several years, the DuPage Convention & Visitors Bureau has been providing advertising services for the hotels and businesses in Willowbrook.

ITEM COMMENTARY (BACKGROUND, DISCUSSION, KEY POINTS, RECOMMENDATIONS, ETC.)

The attached agreement specifies an advertising budget of $47,000 funded from the Hotel/Motel Tax Fund (line item number 03-53-435-317). This amount is consistent with the FY 2010-11 budget presented to the Board at the March 1, 2010 workshop. The Hotel/Motel Tax Advisory Committee approved the agreement and the advertising budget at the January 27, 2010 meeting. The Committee continues to be very satisfied with the advertising services provided by the DuPage Convention & Visitors Bureau.

ACTION PROPOSED: APPROVE THE RESOLUTION

RESOLUTION NO. 10-R-12

A RESOLUTION AUTHORIZING THE VILLAGE PRESIDENT AND VILLAGE CLERK TO EXECUTE A CERTAIN AGREEMENT - DUPAGE CONVENTION AND VISITORS BUREAU

BE IT RESOLVED by the President and Board of Trustees of the Village of Willowbrook, DuPage County, Illinois, that the President and Village Clerk be and the same are hereby authorized and directed to execute the Agreement between the Village and the DuPage Convention and Visitors Bureau, in substantially the form attached hereto and incorporated herein as Exhibit "A".

ADOPTED and APPROVED this 12th day of April, 2010.

APPROVED:

_____
Village President

ATTEST:

_____
Village Clerk

ROLL CALL VOTE: AYES: _____

NAYS: _____

ABSTENTIONS: _____

ABSENT: _____

Agreement

This agreement (hereinafter referred to as the Agreement) is entered into this 12th day of April, 2010 between the Village of Willowbrook, DuPage County, Illinois (the "Village") and the DuPage Convention & Visitors Bureau (DCVB).

At the request of the Village, the DCVB will provide marketing and administrative services to the Willowbrook Hotel/Motel Tax Advisory Committee (the "Committee") for the sole purposes of promoting tourism to the Village of Willowbrook for the period beginning May 1, 2010 through April 30, 2011

The DCVB has agreed to coordinate and implement a comprehensive advertising and marketing program for the period May 1, 2010 to April 30, 2011, on behalf of the Committee and will assist the Committee as follows (activities include but are not limited to):

1. Conduct needs assessment/marketing research and make recommendations to the committee for advertising, marketing and promotional activities.
2. Develop a comprehensive marketing and promotional program that brands Willowbrook. The DCVB will make certain that all promotional materials will contain the following:
   - Branding and recognition of hospitality product in Willowbrook
   - Willowbrook logo
   - State of Illinois logo
   - DCVB logo
   - Date & quantity printed on brochures and direct mail pieces
3. Implement program with the coordination of services with vendors for design and production of ad materials, b brochures, direct mail, etc. and direct all media buys and advertising placement.
4. Provide financial administrative services by project.
5. Provide complete reporting on results to committee on a monthly basis and financial reporting of expenditures to the Village on at least a quarterly basis.

The Village agrees to allocate funds in the amount of $47,000.00 from hotel/motel occupancy tax funds for the purposes outlined above in items #1 through #5. DCVB will administer the funds as outlined in items "A" to "D" below. All funds will be collected and expended between May 1, 2010 and April 30, 2011 with completion by June 30, 2011.

A. Ensure that all Village funds will be identified as a separate expenditure line item for the Village advertising campaign.
B. Maintain that all Village funds will be used for expenditures incurred in promoting Willowbrook as

described above in coordination upon approval of the program.

C. Agrees to do all administrative tasks and oversee payment of all invoices in a timely manner.
D. Provide periodic accounting reports, which include copies of invoices, checks, proof of performance, etc. in conjunction with the promotional program.

This agreement will be carried out by the DCVB for the Committee and the Village of Willowbrook.

In witness whereof, the respective parties have duly executed this agreement, hereto, through there duly authorized officers.

VILLAGE OF WILLOWBROOK

_____
President

Attest:

_____
Village Clerk

DUPAGE CONVENTION & VISITORS BUREAU

_____
Skip Strittmatter
Executive Director
DuPage Convention & Visitors Bureau
FEIN #36-3667324

Attest:

_____
Board Member

VILLAGE OF WILLOWBROOK

BOARD MEETING
AGENDA ITEM - HISTORY/COMMENTARY

ITEM TITLE:

A RESOLUTION TO ADOPT MUNICIPAL LEGISLATIVE POSITIONS AND PRIORITIES FOR THE 2010 LEGISLATIVE SESSION

AGENDA NO. 70

AGENDA DATE: 04/12/10

STAFF REVIEW: Tim Halik, Director of Municipal Services **SIGNATURE:** Tim Halik

LEGAL REVIEW: N/A **SIGNATURE:** _____

RECOMMENDED BY VILLAGE ADMIN.: **SIGNATURE:** Megan E. Priem

REVIEWED & APPROVED BY COMMITTEE: YES ☐ NO ☒ N/A ☐

ITEM HISTORY (PREVIOUS VILLAGE BOARD REVIEWS, ACTIONS RELATED TO THIS ITEM, OTHER PERTINENT HISTORY)

Through the Village's membership in the DuPage Mayors and Managers Conference, we are given an opportunity to be part of a group comprised of more than 1,000,000 residents located within thirty-three (33) communities. Each year, the Conference develops a Legislative Action Program (LAP) outlining the Conference's legislative initiatives to be furthered throughout the year. The LAP booklet is then forwarded to each member municipality for review. After any identifying any desired amendments or exceptions to LAP, it is locally adopted via resolution.

ITEM COMMENTARY (BACKGROUND, DISCUSSION, RECOMMENDATIONS, ETC.)

It is customary for the Village to endorse the Conference's Legislative Action Program through adoption of a local resolution. Therefore, this year's program was reviewed by our Legislative Committee Representative, President Napoli. One initiative that was noted on page 14 of the booklet under the heading, Planning, Land Use & Transportation, was determined to not be supported by the Village. Therefore, the Regional Air Capacity legislative initiative, which pertains to the development of a third regional airport, was excepted within the resolution indicating that we are not supportive of this particular legislative initiative.

The attached resolution was drafted by staff. Once adopted by the Village Board, a signed and certified copy will be forwarded to the DuPage Mayors and Managers Conference.

ACTION PROPOSED:

Adopt Resolution.

RESOLUTION NO. 10-R-13

A RESOLUTION TO ADOPT MUNICIPAL LEGISLATIVE POSITIONS AND PRIORITIES FOR THE 2010 LEGISLATIVE SESSION

WHEREAS, the Village of Willowbrook is a member of the DuPage Mayors and Managers Conference; and,

WHEREAS, the DuPage Mayors and Managers Conference develops its annual Legislative Action Program with the goal of establishing a comprehensive platform on legislative issues in order to protect and benefit the interests of its member municipalities, residents, and businesses in these municipalities, and the region generally; and,

WHEREAS, on January 20, 2010, the DuPage Mayors and Managers Conference voted unanimously to adopt its 2010 Legislative Action Program, attached hereto; and,

WHEREAS, the Village of Willowbrook will be individually benefitted by formally establishing positions on legislative issues affecting municipalities, thereby giving clear direction to officials and employees of the Village of Willowbrook regarding legislative positions that may be represented in official capacity or on behalf of the municipality;

NOW, THEREFORE, BE IT RESOLVED that the Village of Willowbrook hereby adopts as its legislative positions and priorities for the 2010 Legislative Session the positions, goals, and principles of the DuPage Mayors and Managers Conference's 2010 Legislative Action Program, with the following exception:

1. Regional Air Capacity initiative (as noted on page 14 of the program booklet under the Planning, Land Use & Transportation heading)

BE IT FURTHER RESOLVED, that a copy of this Resolution be forwarded to the

DuPage Mayors and Managers Conference, to all state and federal legislators representing the Village of Willowbrook, to the Office of the Governor, and to department heads in the Village of Willowbrook.

ADOPTED and APPROVED this 12th day of April, 2010

APPROVED:

_____
Village President

ATTEST:

_____
Village Clerk

ROLL CALL VOTE: AYES: _____

NAYS: _____

ABSTENTIONS: _____

ABSENT: _____

DMMC LAP

DuPage Mayors and Managers Conference
Legislative Action Program
2010

INTRODUCTION

Founded June 19, 1962, the DuPage Mayors and Managers Conference is a council of 33 municipal governments in DuPage County, Illinois. Each member municipality is represented by its mayor and manager as voting delegates. The Conference is a not-for-profit organization supported by membership dues and grants.

The purpose of the Conference is to foster intergovernmental cooperation among municipalities and between municipalities and other levels of government; to provide research and technical assistance in the development of solutions to local problems presented by member municipalities; to articulate positions and, when appropriate, implement solutions to regional, state and countywide problems; to serve as an information clearinghouse for member municipalities; to provide training and educational programs designed to foster leadership development and an understanding of municipal issues; to uphold and advocate principles of effective local government and to otherwise lessen the burdens of government.

This document represents municipal positions on state and federal issues affecting local government and the DuPage Mayors and Managers Conference's desire to build and maintain a collaborative partnership between state and local government as we serve our common constituency.

The Legislative Action Program is divided into three parts.

Legislative Principles represent the basis and underpinnings of our legislative effort and provide a guide for legislative review. They help understand how legislative positions are developed, and they serve as a benchmark to evaluate the impact of legislative proposals on municipalities.

Legislative Priorities are those specific, important issues that the Conference pursues either through drafting and sponsoring legislation; or through strong advocacy in cooperation with other municipal organizations. Legislative Priorities have always been the primary focus of our legislative efforts.

Legislative Position Statements are expressions of support or opposition on issues that affect municipalities. They can be legislative proposals that re-appear frequently and generate some efforts by the Conference to educate legislators of the pros/cons of the issues; or they may never arise during the legislative year. They generally require less time and effort than Legislative Priorities, though on occasion, they may become more significant and require more time and effort from the Conference.

The second year of the 96th General Assembly has begun. This will be an interesting and difficult year due to the growing budget deficit. While it would seem the legislature and the Governor would give their full attention to the state's financial meltdown, there will be plenty of time to consider more pension sweeteners. The 2010 Legislative Action Program continues to promote the needs and concerns of DuPage municipalities. This year, however, members will especially keep a close eye on potential efforts that might direct municipal revenues to help bail out the state.

LEGISLATIVE PRINCIPLES

The DuPage Mayors and Managers Conference has always advocated on behalf of municipalities. It is a central purpose of the Conference and an important service provided by the organization.

These Principles represent our core values. They reflect the important elements that are necessary to permit municipalities to serve residents effectively and to protect the health, safety, and welfare of the community. They are the basis for the priorities and policies adopted by the Conference and its members. They explain how and why municipalities take positions on legislative issues.

PROTECT MUNICIPAL REVENUES

Local governments are challenged to fund essential services with existing resources. Local revenue sources are limited and restricted by the state. Many revenues are dependent on state authorization, collection and distribution. Municipalities are often threatened with revenue diversions (both permanent and temporary) and state fee increases (beyond the value of the service provided). In recent times, municipalities have completely lost revenue sources through actions of the state (sales tax on truck sales, photo processing tax). **The state should not balance its budget on the backs of municipalities, and should not disrupt local budgets by removing or reducing local revenues.**

REJECT UNFUNDED STATE MANDATES

The state should avoid policies that impose disproportionate responsibilities on local governments or increased financial liability without recognizing and financing the impact of those policies. Too often, legislation requires communities to divert local expenditures from municipal responsibilties and use them to fund state-imposed programs. This is not about the need or efficacy of the program, but rather, about the decision of the state to abdicate responsibility for funding the state's program. **State policies should not impose new obligations on local governments or increase financial liability without providing adequate funds to reimburse municipalities for these new mandates.**

RESPECT HOME RULE AUTHORITY

There are nearly 200 home rule municipalities in Illinois. Home rule municipalities have self-governance authority to serve these communities and to customize laws to meet the specific needs of citizens. Locally elected officials in those home rule communities are able to determine what is best for their communities and the state should not limit home rule authority. The distinction between home rule and non-home rule communities should be removed to recognize the ability of all municipalities to govern themselves, regardless of population. **The state should not restrict or over-ride home rule authority or the authority of residents to govern their communities.**

PRESERVE THE RIGHT OF MUNICIPALITIES TO MANAGE EMPLOYEES AND DETERMINE WAGES AND BENEFITS

In most municipal operating budgets, nearly three-fourths of expenditures are for personnel. Certainly good wages and benefits are important, but must be balanced with other municipal spending priorities. In recent years, state-mandated pension and benefit increases have stretched local government budgets and forced service reductions and tax increases. Pensions, especially, have burdened muncipalities as the legislature adds more and more benefits. These increases and pension sweeteners increase the tax burden to residents and must be reined in. Additionally, mandated rules on how employees are hired, managed, paid and disciplined interfere with the employer/employee relationship. **The state must preserve the authority for all decisions impacting employees to be made by the municipal employer.**

PRESERVE LOCAL AUTHORITY

Freedom to make decisions at the local level is the best way that muncipalities can fully serve their unique constituencies. Activities such as franchising, zoning, issuing permits and licenses, and local code enforcement are fundamental responsibilities of local governments. Furthermore, policies should not undermine or preempt local authority to protect the health, safety and welfare of local residents. Preemptive policies constrain the ability of local elected officials to tailor policies to local needs and demands. The state must reject laws that erode local decision-making authority.

PROTECT THE PUBLIC RIGHTS-OF-WAY AND ADVANCE THE MODERNIZATION OF PUBLIC UTILITIES

Regulated public utilties provide municipalities with necessary services and commodities. In order to deliver these services and commodities, regulated public utilties utilize the public rights-of-way. Municipalities, residents and commercial interests should have a role in the decisions affecting this land both as interested parties and as customers of the regulated public utilty. Regulated utilities must become more open to new technologies, new approaches and new behaviors to become better partners with municipalities and residents; and must also develop a proactive culture of customer service, open communications, reliability, and addressing localized matters of importance.

LEGISLATIVE PRIORITIES

PUBLIC SAFETY PENSION REFORMS

Additional reforms to the police and fire pension systems are needed to protect the pension systems and the obligations to police officers and firefighters, while recognizing the growing stress these pensions place on municipalities and their residents.

In 2008, the legislature adopted proposals from municipalities that would bring improved accountability, ethics, professionalization of fund management, conflict-of-interest restrictions, and public disclosure of pension board activity. These reforms were important and overdue - but more still needs to be done. The Conference is proposing four more reforms to further improve the operations of public safety pension boards without altering in any way the pension benefits that are guaranteed to either pensioners or current employees.

- **Remove Pension Levies from Tax Cap** - Because of previous state-mandated pension increases, combined with current economic conditions, it is imperative to have pension costs removed from the tax cap for non-home rule communities. Pension mandates are funded entirely by local communities, requiring diversions from other municipal services and employee reductions. The economy in the past six months suggests municipal officials should expect unprecedented low returns on investment portfolios. The ability of local governments to keep public safety pensions adequately funded will be greatly eroded without a change to the pension levy restrictions.

- **Municipal Right-of-Intervention in All Pension Board Matters** - Municipalities used to have the right to appear before police and fire pension boards to provide evidence that might contradict a disability claim, or to aid in the determination regarding whether a pension benefit should be awarded. That right was taken away by the courts, and it needs to be restored by the General Assembly.

- **Permissive Authority for Police and Fire Pension Boards to Invest Funds in IMRF** - Downstate and suburban police and fire pension boards are restricted to certain investments based upon the fund's size. This proposal would allow pension boards to voluntarily elect to invest money with IMRF. Because IMRF is professionally managed and subject to far fewer investment restrictions, police and fire pension boards electing to allow IMRF to invest their money may benefit from potentially greater investment returns. Data from the Illinois Department of Financial and Professional Regulation has shown most funds are underperforming. Allowing these funds to invest money with IMRF would enhance their potential to meet assumptions, and may potentially relieve municipalities from overly burdensome contributions.

- **Blended Salary Average for Pension Calculations of Newly-Hired Police and Firefighters** - Police and firefighter pensions are determined based upon a calculation that includes years of service multiplied by creditable service multiplied by final salary. Public safety pensions use the salary earned by the employee on the last day of service as the final salary. Other municipal employees who participate in IMRF are subject to a similar formula. A significant difference, however, is that the final salary determination under IMRF is the highest four consecutive years out of the last ten years of an employee's career. The suggested statutory change would bring the police and fire pension funds into compliance with most other public pension systems established within Illinois (13 of 17). The change would only be applicable to police officers and firefighters hired after the effective date of the new law.

AMEND THE PUBLIC SAFETY EMPLOYEE BENEFITS ACT

It is necessary to amend the Public Safety Employee Benefits Act (PSEBA) to clarify and re-enforce the purpose of this important legislation. Without these changes, employees, taxpayers and local governments will experience excessive and unnecessary costs.

The intent of this legislative initiative is to seek a sound, negotiated, legislative compromise to avoid fiscal strife and the possible cut back of other services and programs. It is not intended to limit or deny a catastrophically injured public safety employee, who is unable to work in any other gainful employment, from collecting their rightful health insurance benefits and other compensation.

PSEBA was enacted in 1997 and provides that municipal public safety employees who have been killed or sustain a "catastrophic injury" in the line-of-duty receive health insurance benefits for life from the municipality. These benefits include the employee's family.

In 2003, the Illinois State Supreme Court ruled that any police or fire employee who receives a line-of-duty disability pension is catastrophically injured and is entitled to the municipally-funded health insurance benefits for life. The definition set forth by the Illinois Surpreme Court exposes financially strapped municipalities and taxpayers to huge health care liabilities by requiring municipalities to pay lifetime health insurance benefits for individuals (and their families) who are otherwise able to obtain gainful employment, sometimes at a higher rate of compensation; who have access to other health insurance benefits; and who are collecting a pension of 65% of their salary tax free.

A section of the Act provides that "health insurance benefits payable from any other source shall reduce the benefits payable under this section". This section does not require any notice to the municipality that the employee has subsequent employment or access to health insurance benefits from that subsequent employer nor does it require the employee to accept available health benefits from a subsequent employer.

The legislative initiative would propose to address the Act as follows:

- Define "Catastrophic Injury" in a manner consistent with the use of the term within the federal Public Safety Officers' Benefits Act of 1976. The federal law considers injuries "catastrophic" when they are defined as "consequences of an injury that permanently prevents an individual from performing any gainful work";

- Require the employee to give notice of new employment to the municipality;

- Require the employee to give notice if insurance benefits are available at subsequent employment;

- Require the employee to give notice if insurance benefits are available through a spouse's employment;

- When coverage from the subsequent employer or spouse is comparable (or greater) to the municipal coverage, require the employee to accept this coverage if no unreasonable hardship is faced; and

- When coverage from the subsequent employer or spouse is less favorable than municipal coverage, seek to require the disabled employee to accept this coverage if the municipality provides separate additional coverage or compensation so that the total benefits received by the employee are comparable (or greater) than the municipal coverage.

PROTECT AUTHORITY FOR RED LIGHT CAMERA ENFORCEMENT

The Conference supports the continued use of red light camera enforcement for municipalities to address important and significant public safety concerns.

In 2006, legislation was amended to add DuPage County, along with other collar counties, to the list of jurisdictions that could enforce violations of traffic code offenses using cameras. This tool, initially used only in the City of Chicago, but implemented around the world, has had significant success in reducing traffic accidents.

- A 2005 study of the Raleigh, North Carolina red light camera program conducted by the Institute for Transportation Research and Education at North Carolina State University compared "before" and "after" red light camera intersection data and found right-angle crashes *dropped by 42 percent*, rear-end crashes *dropped by 25 percent* and total accidents *dropped by 22 percent*.

- A 2007 study of speed cameras on Arizona State Route 101 in Scottsdale found a 50 percent reduction in the total crash frequency, with injuries *falling by 40 percent*. However rear-end collisions increased by 55 percent.

- The Insurance Institute for Highway Safety has found that cameras have been shown to substantially reduce red light violations. Institute evaluations in Fairfax, Virginia and Oxnard, California showed that camera enforcement *reduced red light running violations by about 40 percent*. In addition to reducing red light running at camera-equipped sites, violation reductions in both communities carried over to signalized intersections not equipped with red light cameras, indicating community-wide changes in driver behavior. An Institute evaluation of red light cameras in Philadelphia, Pennsylvania, found that after red light violations were reduced by 36 percent following increased yellow signal timing, the addition of red light cameras further *reduced red light violations by 96 percent*. In addition to reducing red light violations, cameras have been shown to reduce intersection crashes. In Oxnard, California, significant city-wide crash reductions followed the introduction of red light cameras, and injury crashes at intersections with traffic signals were *reduced by 29 percent*. Front-into-side collisions - the crash type most closely associated with red light running - *were reduced by 32 percent* overall, and front-into-side crashes involving injuries were *reduced by 68 percent*. ***An Institute review of international red light camera studies concluded that cameras reduce red light violations by 40-50 percent and reduce injury crashes by 25-30 percent.***

Red light camera enforcement in Illinois has come under attack recently in newspapers and demonstrations opposing its use - often focusing on the enforcement of right-turns-on-red. These foes of the cameras have determined that municipalities should disregard enforcement of provisions in the vehicle code. (One wonders what other provisions of the vehicle code they would determine unworthy of enforcement?)

The Conference is willing to consider and support changes to the existing legislation to address some of the concerns and make improvements in the operations of the program. These could include such enhancements as review of all citations by a police officer; a video recording of all right-turn-on-red citations; timing of the amber light set in accordance to IDOT specifications; and ability for those who receive citations to contest the ticket by mail or in person.

FOIA - COMMERCIAL REQUESTS

The Conference supports an amendment to the new FOIA legislation (P.A. 98-0542) to authorize municipalities to deny commercial requests under FOIA or, alternatively, to charge for the full market-value of the records.

Municipalities understand the vital role that open government plays in our democratic process. Municipalities support and facilitate individuals seeking to learn more about their government and participate in the public debate. While "transparency" is an overused word, municipalities truly do strive to permit the public to see and understand the operations and actions of their government.

Beginning on January 1, 2010, sweeping changes to the state's Freedom of Information Act (FOIA) will go into effect. The changes will have a substantial impact in the way that municipalities process and handle requests for records. At the same time, municipalities are being asked to provide more services with less resources, further increasing the burden created by such provisions as the five-day requirement for responses. Throughout the legislative process, the Conference expressed significant concerns with this legislation. These concerns center around the ability of municipalities to be able to comply with the requirements of the new changes. The implementation of the new changes could be cumbersome at best. One of the biggest burdens that communities face is the issue of commercial requests.

Under the new changes to FOIA, public bodies must respond to FOIA requests that are made for commercial purposes. While there is some greater flexibility in the time limits, municipalities must still provide the information and may not charge more than the de minimis fee allowed for noncommercial requests. IN EFFECT, THE RESIDENTS OF THE COMMUNITY CONTRIBUTE THEIR TAXES TO PROVIDE INFORMATION TO COMMERICIAL ENTERPRISES.

The purpose of any open-records law is to promote democracy and increase transparency. But often, commercial enterprises try, instead, to use these laws for the purpose of getting free marketing information. This practice imposes extreme burdens on public bodies. These commercial requests are often large and complex, and they require substantial resources to process. They divert time, attention and resources from responding to more legitimate records requests. And they often ask for personal or private information, the disclosure of which would not be in the best interest of Illinois' citizens.

It is hoped that by eliminating the onus of responding to complex, costly, and unnecessary requests, public bodies will see less of a burden under the new law and will be able to concentrate on providing better response to legitimate FOIA requests. The Conference proposes to prohibit all commercial requests for public records for commercial purposes.

If, however, the Legislature believes that commerical requests for public records should be funded by taxpayers, then the following provisions should by added to the Act:

- Exempt commercial requests from FOIA's time limits, while instead requiring a response in a reasonable time considering the size and complexity of the request;

- Charge a fee for providing records for commerical purpose that is based on the full cost of producing the records or the easily discernable commercial value of the record; and

- Impose treble damages for any person who fails to disclose or who improperly uses information gained from a FOIA request for commercial purposes.

WESTERN ACCESS - O'HARE AIRPORT

The Conference supports the continued improvement of O'Hare Airport including the access to the airport from the west, consisting of the Western Bypass and the Elgin-O'Hare Expressway.

DuPage municipalities around O'Hare have joined together to promote and support the construction of the Elgin-O'Hare extension and Western Bypass. These road and airport improvements are expected to increase the annual gross regional product of the DuPage economy in 2006 dollars by $3.6 billion in 2015 and more than $10 billiion in 2030.

These communities support IDOT Western Bypass Design 203 (north section of the Western Bypass to be constructed along a railroad right-of-way north of Elgin-O'Hare Expressway); and IDOT Western Bypass South Alignment "D" (brings the south leg of the proposed Western Bypass to the east of the existing rail corridor in Franklin Park).

In order to keep up with the O'Hare Modernization Program, design and engineering of these roads must begin soon to meet the proposed completion date of December 31, 2015.

IDOT does not currently have the funding necessary to complete the project within the proposed timeline. If necessary authorizations and funding are not forthcoming soon, other options must be considered.

A viable option is to work with the Illinois State Toll Highway Authority. The Authority has the ability to issue bonds and provide financing for this project. Municipalities are willing to pursue discussions with the Authority, and have already begun to review this approach.

Regardless of the option chosen, engineering and work must begin soon; and any legislative action that is necessary to move the project forward should be completed during the 2010 session.

POSITION STATEMENTS

STATE AND LOCAL FINANCE

SUPPORT LOCAL FUNDING ALTERNATIVES
Support alternative revenue sources, which lessen reliance on the property tax. As one example, expand the Business and Occupation tax to allow municipalities to tax all businesses and occupations. Also, allow municipalities with no property tax base to levy an initial property tax without referendum.

HOTEL MOTEL TAX REVENUE EXPENDITURE
Amend the Hotel Motel Tax to expand the use of funds by non-home rule municipalities.

REGIONAL EQUITY
Assure that there is a reasonably close relationship between the amount of tax dollars raised within a municipality or county by state and regional agencies, compared to the amount of dollars or services returned to those municipalities and counties by those state and regional agencies.

MUNICIPAL ADMINISTRATION OF MOTOR FUEL TAX FUNDS
Currently, Motor Fuel Tax (MFT) funds require significant oversight by the Illinois Department of Transportation. While this is appropriate for major projects, it is simply overkill for small projects. Municipalities have the expertise to handle contracting, finance, and clerical functions and could save the state and municipal governments money if routine maintenance and resurfacing projects were not subject to approval and supervision of the Department.

LOCAL GOVERNMENT AUTHORITY

NON-HOME RULE SALES TAX EXPENDITURE
Broaden allowable uses of referendum-approved sales tax increases to mirror the uses of the state-shared sales tax.

REAL ESTATE TRANSFER TAX
Allow municipalities to enact or increase a real estate transfer tax without a referendum.

OPEN MEETINGS ACT - E-MAIL/ELECTRONIC MEETING ATTENDANCE
Amend the Open Meetings Act to exclude the use of email in the definition of "meeting" (except when used as immediate electronic communication) and allow electronic meeting attendance in cases of non-emergencies and out-of-town vacations.

OPEN MEETINGS ACT - NEW BUSINESS
Clarify the Open Meetings Act to explicitly authorize municipal boards to vote on items raised under "New Business".

TORT REFORM
Protect the Tort Immunity Act from changes that create undue liability exposure for municipalites. For example, use agreed language that is embraced by all affected parties for any amendments.

ADMINISTRATIVE ADJUDICATION
Allow prosecution of minor offenses through local administrative adjudication for non-home rule municipalities, and increase the limit for adjudication of civil fines up to $1,000.

LOCAL GOVERNMENT AUTHORITY, CONTINUED

ELECTION OF TAXING BODIES
Require all special districts with taxing authority to have Board members that are elected, and not appointed.

MUNICIPAL CONTROL OF FOREIGN FIRE INSURANCE TAX
Elected municipal officials, not fire department members, should receive, budget, and spend the revenues from the Foreign Fire Insurance Tax.

AUTHORIZATION FOR PART-TIME CODE ENFORCEMENT EMPLOYEES
State statutes relating to housing codes, zoning ordinances, and nuisances for non-home rule communities require that a full-time municipal employee issue the citation for violations.

REGULATION AND LICENSING FOR PROPERTY MAINTENANCE
Only home rule municipalities are permitted to establish property inspection systems, licensing and regulation of rental property managers, and licensing and regulation of landlords. These regulation and licensing programs promote compliance with building, housing, and zoning regulations; identify responsible parties and provide contact information to enforce violations of codes; and contribute greatly to keeping property values strong.

DELAY CHANGING MUNICIPAL COUNCIL DISTRICT BOUNDARIES
With the 2010 census data estimated to be completed and reported by December 2010, this proposal will delay the redistricting of council districts until the 2013 election cycle.

PUBLISHING ORDINANCES AND NOTICES ON MUNICIPAL WEBSITES
Municipal governments should be allowed to choose to publish local ordinances and notices on the community's website.

PERMISSIBLE OWNERSHIP OF EXCHANGE TRADED FUNDS (ETF)
In order to address ethics issues, municipal officials who own a stock within an Exchange Traded Fund of not more than 1% of a corporation may still vote on issues involving the company without there being a conflict of interest.

PERSONNEL AND COLLECTIVE BARGAINING

PREVAILING WAGE ACT
Repeal or modify the Prevailing Wage Act to give municipalities more flexibility, and permitting limited local budgets to address the needs of local residents.

REGULATION OF CHARITABLE SOLICITATIONS ON BEHALF OF POLICE OR FIRE UNIONS
Develop effective efforts to prevent fraud and misrepresentation by solicitors.

"CONFIDENTIAL EMPLOYEES" UNDER ILRA
Legislation is necessary to include within the definition of "confidential employees" those secretaries and similar support staff working directly for certain management personnel and ensure that such employees are not considered "public employees" entitled to membership within a bargaining unit.

PERSONNEL AND COLLECTIVE BARGAINING, CONTINUED

AMEND PUBLIC SAFETY PENSION BOARD TRAINING LEGISLATION

The 2009 legislation (P.A. 96-0429) needs to be amended to permit training using current technology (on-line courses, webinars) and expand provisions to permit local community colleges to be certified to provide training.

WORKERS' COMPENSATION ACT - INFLUENCE OF DRUGS OR ALCOHOL

Legislation is needed to amend the Workers' Compensation Act to provide that there is a rebuttable presumption that an employee who sustains an injury while under the influence of drugs or alcohol was outside the course and scope of the employee's employment and thus not entitled to benefits under the Act.

AMEND THE ILLINOIS LABOR RELATIONS ACT TO INCLUDE FINANCIAL ABILITY

Amend the Act to include the interest and welfare of the public and the financial ability of the unit of government to meet costs as primary factors for consideration during interest arbitration.

UNEMPLOYMENT INSURANCE FOR SCHOOL CROSSING GUARDS

Municipalities who employ school crossing guards are at a disadvantage because, unlike crossing guards employed by school districts, those employed by municipalities may file for unemployment insurance benefits during the summer recess or holiday recess. This inequity should be corrected to permit municipalities the same protection from unemployment claims.

PUBLIC SAFETY, UTILITIES & ENVIRONMENT

ENFORCEMENT OF STATE LAWS UNDER LOCAL CODES

Protect the authority of communities to enforce state statutes under local authority by enacting the state statute as a part of the municipal code.

INTEROPERABILITY FUNDING

Encourage the federal government to provide additional funding for the implementation of interoperable radio systems to provide communications between emergency agencies.

NET METERING FOR WIND FARMS

Legislation in 2008 provided that local governments are eligible to own and operate a wind generation turbine farm. However, to be effective, the statute must mandate net aggregate metering.

MUNICIPAL EXEMPTION FROM PROVIDING DEFIBRILLATORS IN PARKS

Current law requires that indoor and outdoor physical fitness facilities have automatic external defibrillators (AED), and an individual trained in the use of the AED, on site. Public Act 95-0712 exempts park districts from this regulation - but not municipal park departments.

EXTENSION OF WIRELESS EMERGENCY TELEPHONE SAFETY ACT

Public safety agencies and wireless carriers operating wireless 9-1-1 and wireless E9-1-1 systems require adequate funding to recover the costs of designing, purchasing, installing, testing, and operating enhanced facilities, systems and services necessary to comply with the wireless E9-1-1 requirements mandated by the Federal Communications Commission.

PUBLIC SAFETY, UTILITIES AND ENVIRONMENT, CONTINUED

OPPOSE USE OF ETSB FUNDS TO PURCHASE AUTOMATED EXTERNAL DEFIBRILLATORS

Emergency Telephone Service Boards have limited funds to support the police and fire agencies they serve. Diverting funds reduces the ability of public safety agencies to assure the availability of current equipment and technology.

ABILITY OF NON-HOME RULE MUNICIPALITIES TO TAX OUT-OF-STATE GAS

While home rule municipalities can levy a tax on natural gas provided by out-of-state companies, non-home rule municipalites cannot levy the tax. Legislation is needed to authorize this important source of funding.

MUNICIPAL UTILITY AUDITS

The state should not limit the ability of municipalities to audit the taxes that are due to communities from public utilities. Further, the utilities should be responsible for their errors in collecting and disbursing tax revenues. Municipalities should not be punished for the mistakes of the utilities.

MUNICIPAL SPEED LIMIT REDUCTION

Permit municipalities to lower the speed limit to less than 35 mph in large lot and/or low populated areas.

RELIEVE MUNICIPAL RESPONSIBILTY FOR MEDICAL COSTS FOR SELF-INFLICTED INJURIES FOR ARRESTEES

The County Jail Act should be amended to relieve municipalities for the responsibility for medical costs for self-inflicted injuries to arrestees.

PUBLIC SAFETY FEE INCREASES

Municipalities should be allowed to add a $20 fee to court costs for felon, misdemeanor, and traffic violations which would go to the local government making the arrest. In addition, prosecution fees for violations of municipal ordinances should be raised from $10 to $25.

REPAIR CONTRADICTORY LAWS FOR LOW SPEED VEHICLES ON MUNICIPAL ROADS

Two legislative proposals approved by the Governor must be reconciled because they directly conflict. Legislation should prohibit the use of low speed vehicles on municipal roads unless the municipality votes to allow their use.

PLANNING, LAND USE & TRANSPORTATION

REGIONAL AIR CAPACITY

Planning for Regional Air Capacity should seek out the best and most efficient means to meet future demands for air travel while protecting the safety, well-being and housing of residents, businesses and travelers. The proposed third regional airport must advance immediately to meet the region's air travel needs.

SIGN REGULATION

Protect municipal authority to regulate signs.

PLANNING, LAND USE AND TRANSPORTATION, CONTINUED

LIMIT BILLBOARD REMOVAL COMPENSATION
Support legislation to allow municipalities to continue using amortization as a form of "just compensation" when zoning makes a billboard a nonconforming use. Prior to a 2004 court decision, amortization was allowed. Since then, municipalities have been required to pay for removal of a billboard, regardless of age or condition.

EXPAND ALLOWABLE ANNEXATION BOUNDARIES
Expand a municipality's rights with respect to involuntary annexations by adding railroad and utility rights-of-way as allowable boundaries.

LAND DISCONNECTION
Prohibit the disconnection of land from a municipality without the approval of the city council or the village board.

WESTERN ACCESS
Western Access for O'Hare Airport must be constructed as a meaningful "front entrance" to the facility, and any roadways and other infrastructure must be located within existing airport property. Adjacent municipalities must be involved in planning and development of Western Access and the resulting impact on those communities.

LOSS OF AFFORDABLE HOUSING
O'Hare expansion as proposed would create a significant negative impact on the availability of affordable housing in DuPage County. This must be recognized as a crucial issue by policymakers at all levels and it is vital that the City of Chicago replace all affordable housing units in DuPage lost to O'Hare expansion.

SUPPORT NEGATIVE USE RESTRICTIONS
Allow non-home rule communities to enact negative use restrictions that prevent "big box" stores that relocate outside a community from prohibiting another, similar business from locating at the previous site.

SPECIAL SERVICE AREAS FOR STORMWATER FACILITIES
Allow the use of special service areas to provide maintenance and operations for drainage facilities that are the responsibility of homeowner associations.

LOCAL GOVERNMENT CEMETERIES
The legislature should not impose onerous regulatory burdens on municipal cemeteries. Extending every single proposed regulatory requirement to also cover government-operated cemeteries is cost-prohibitive, intrusive, overly restrictive and wholly unnecessary considering that the purpose behind legislation resulted from an incident at a for-profit cemetery.

ADVERSE POSSESSION FOR SEWER AND WATER PIPES
This would provide that the 20-year period that must pass before a municipality can assume ownership rights over a water or sewer pipe begins at the time the pipe is installed and not when the property owner first learns of the pipe.

PLANNING, LAND USE AND TRANSPORTATION, CONTINUED

LOCAL GOVERNMENT QUICK-TAKE AUTHORITY
Municipalities should be granted quick-take authority for the acquisition of land for specific purposes.

ALTERNATIVE SPECIAL SERVICE AREA DISCONNECTIONS
Municipalities should be allowed to petition the circuit court for disconnection of territory from a special service area if the territory was added mistakenly and receives no benefit from the special service area.

ALLOW MUNICIPAL ANNEXATION OVER A CONSERVATION AREA
Legislative authority is needed to permit municipalities to jump over a conservation area owned by a not-for-profit organization for the purpose of annexing the land on the other side.

SUPPORT THE RESTORATION OF FUNDING FOR THE COMPREHENSIVE REGIONAL PLANNING FUND
The state budget should include an appropriation of $5 million annually from the state General Revenue Fund for the Chicago Metropolitan Agency for Planning (CMAP) and comprehensive planning throughout Illinois. This state support for planning should not divert municipal revenues to provide these funds.

DUPAGE MAYORS AND MANAGERS CONFERENCE

an association of municipalities representing over 1,000,000 people

1220 Oak Brook Road
Oak Brook, Illinois 60523-2203
(630) 571-0480
Fax: (630) 571-0484
www.dmmc-cog.org

Founded June 19, 1962

MEMBER MUNICIPALITIES

Addison
Aurora
Bartlett
Bloomingdale
Bolingbrook
Burr Ridge
Carol Stream
Clarendon Hills
Downers Grove
Elmhurst
Glen Ellyn
Glendale Heights
Hanover Park
Hinsdale
Itasca
Lemont
Lisle
Lombard
Naperville
Oak Brook
Oakbrook Terrace
Roselle
St. Charles
Schaumburg
Villa Park
Warrenville
Wayne
West Chicago
Westmont
Wheaton
Willowbrook
Winfield
Wood Dale
Woodridge

February 2, 2010

MEMORANDUM TO: MANAGERS / ADMINISTRATORS

FROM: ROBERT IDEN
DMMC CONFERENCE PRESIDENT

RE: 2010 LEGISLATIVE ACTION PROGRAM

I am pleased to forward you copies of the Conference's *2010 Legislative Action Program* (LAP). We greatly value this opportunity to give a municipal voice to the more than 1,000,000 residents of our 33 member communities.

A sufficient quantity of LAP booklets is enclosed so that you may distribute them to your Mayor/President and entire Council/Board. We hope you will find it a valuable document and reference it often during the year.

Many of our member communities endorse all or part of the LAP. Also enclosed for your use is a sample Resolution to Adopt Municipal Legislative Positions and Priorities for the 2010 Legislative Session. Please feel free to edit the resolution to fit the needs of your municipality, if necessary.

Electronic versions of both the LAP and sample Resolution will be emailed to you.

The proposals in this year's LAP reflect the needs and values of municipalities as they strive to maintain local economic viability and a healthy sense of community, which are necessary to promote safe, livable, and sustainable communities.

If you have any comments or questions regarding the contents of the *2010 Legislative Action Program*, please feel free to contact Rick Curneal, Legislative Director, at rcurneal@dmmc-cog.org or (630) 571-0480, ext. 225.

Thank you.

VILLAGE OF WILLOWBROOK

BOARD MEETING
AGENDA ITEM - HISTORY/COMMENTARY

ITEM TITLE:
A RESOLUTION ACKNOWLEDGING REQUIREMENTS OF THE ILLINOIS DEPARTMENT OF TRANSPORTATION (IDOT) AS THEY PERTAIN TO THE MAINTENANCE OF VILLAGE OWNED UTILITIES LOCATED WITHIN STATE RIGHTS-OF-WAYS.

AGENDA NO. 9p

AGENDA DATE: 04/12/10

STAFF REVIEW: Tim Halik, Director of Municipal Services **SIGNATURE:** Tim Halik

LEGAL REVIEW: William Hennessy **SIGNATURE:** W Hennessy

RECOMMENDED BY VILLAGE ADMIN.: **SIGNATURE:** Megan E. Peim

REVIEWED & APPROVED BY COMMITTEE: **YES** ☐ **NO** ☒ **N/A** ☐

ITEM HISTORY (PREVIOUS VILLAGE BOARD REVIEWS, ACTIONS RELATED TO THIS ITEM, OTHER PERTINENT HISTORY)

Every two years, the Village is requested to adopt a resolution acknowledging requirements of the Illinois Department of Transportation (IDOT) as they pertain to the maintenance of Village owned utilities (e.g., water mains, storm sewers, street lights, etc.) located within state owned rights-of-ways.

Typically, IDOT requires that a surety bond is submitted along with each permit application received to perform work upon a state right-of-way. However, for municipal work, a resolution is acceptable in lieu of a surety bond. The resolution will be applicable for a two-year period.

ITEM COMMENTARY (BACKGROUND, DISCUSSION, RECOMMENDATIONS, ETC.)

The attached resolution was drafted by staff and reviewed and approved by the Village Attorney. Once adopted by the Village Board, a signed and certified copy will be forwarded to IDOT.

ACTION PROPOSED:

Adopt Resolution.

RESOLUTION NO. 10-R-14

A RESOLUTION ACKNOWLEDGING REQUIREMENTS OF THE ILLINOIS DEPARTMENT OF TRANSPORTATION (IDOT) AS THEY PERTAIN TO THE MAINTENANCE OF VILLAGE OWNED UTILITIES LOCATED WITHIN STATE RIGHTS-OF-WAYS.

Whereas, the Village of Willowbrook, hereinafter referred to as MUNICIPALITY, located in the County of DuPage, State of Illinois, desires to undertake, in the years 2010 and 2011, the location, construction, operation and maintenance of watermains, storm sewers, streetlights, sidewalks, landscaping, etc., on State highways, within said MUNICIPALITY, which by law and/or agreement come under the jurisdiction and control of the Department of Transportation of the State of Illinois, hereinafter referred to as DEPARTMENT, and,

Whereas, an individual working permit must be obtained from the DEPARTMENT prior to any of the aforesaid installations being constructed either by the MUNICIPALITY or by a private person or firm under contract and supervision of the MUNICIPALITY.

NOW, THEREFORE, BE IT RESOLVED by the President and Board of Trustees of the Village of Willowbrook, DuPage County, Illinois, that,

FIRST: The MUNICIPALITY hereby pledges its good faith and guarantees that all work shall be performed in accordance with conditions of the permit to be granted by the DEPARTMENT, and to hold the State of Illinois harmless during the performance of such work, and assume all liability for damages to person or property due to accidents or otherwise by reason of the work which it to performed under the provision of said permit.

SECOND: That all authorized officials of the MUNICIPALITY are hereby instructed and authorized to sign said working permit on behalf of the MUNICIPALITY.

ADOPTED and APPROVED this 12th day of April, 2010

APPROVED:

_____
Village President

ATTEST:

_____
Village Clerk

ROLL CALL VOTE:

AYES: _____

NAYS: _____

ABSTENTIONS: _____

ABSENT: _____

Illinois Department of Transportation
Division of Highways/Region One / District One
201 West Center Court/Schaumburg, Illinois 60196-1096

PERMITS
Resolution for Construction on State Highway

Rec. 3/24/10

March 22, 2010

Mr. Robert A. Napoli
Village President
Village of Willowbrook
7760 Quincy Street
Willowbrook, IL 60527

Dear Mr. Napoli:

Chapter 121 of the Illinois revised statutes requires that any person, firm or corporation desiring to do work on state maintained rights of way must first obtain a written permit from the Illinois department of transportation. This includes any emergency work on broken watermains or sewers.

A surety bond is required with each permit application to insure that all work is completed in accordance with state specifications and that the right of way is properly restored.

For permit work to be performed by employees of a municipality a resolution is acceptable in lieu of the surety bond. This resolution does not relieve contractors hired by the municipality from conforming with the normal bonding requirements nor from obtaining permits.

The resolution should be enacted for a period of two years. This procedure will save time and effort as well as reduce the annual paperwork associated with an annual resolution.

In order to expedite the issuance of permits to your municipality during the next two calendar years the attached sample resolution should be adopted and a signed and certified copy thereof returned to this office. This resolution does not constitute a blanket permit for work in the State system. A separate application must be made in each instance. In the case of an emergency, verbal authority may be given prior to receipt of the written application. After normal working hours or weekends, this authority can be obtained from our Communications Center at (847)705-4612.

RECEIVED
MAR 24 2010
VILLAGE OF WILLOWBROOK
MUNICIPAL SERVICES DEPT.

We would appreciate the cooperation of your community in withholding the issuance of building permits along State highways until the builder shows evidence of a State highway permit having been obtained. Our permit staff would be willing to answer any questions you may have regarding current policies or practices and to work with your planning commission on any new developments within your municipality.

Do not hesitate to contact Ms. Beverly Hawley, Office Coordinator at (847) 705-4142.

Very truly yours,

Diane M. O'Keefe, P.E.
Deputy Director of Highways,
Region One Engineer

Thomas Gallenbach

By:
Thomas G. Gallenbach, P.E.
Traffic Permits Engineer

VILLAGE OF WILLOWBROOK

BOARD MEETING
AGENDA ITEM - HISTORY/COMMENTARY

ITEM TITLE:
A RESOLUTION WAIVING THE COMPETITIVE BIDDING PROCESS AND AUTHORIZING THE VILLAGE PRESIDENT AND VILLAGE CLERK TO EXECUTE A CERTAIN AGREEMENT – LANDSCAPE FERTILIZATION SERVICES – BETWEEN THE VILLAGE OF WILLOWBROOK AND SPRING GREEN LAWN AND TREE CARE

AGENDA NO. 7g

AGENDA DATE: 04/12/10

STAFF REVIEW: Tim Halik, Director of Municipal Services **SIGNATURE:** Tim Halik

LEGAL REVIEW: William Hennessy **SIGNATURE:** W Hennessy

RECOMMENDED BY VILLAGE ADMIN.: **SIGNATURE:** Megan E. Dein

REVIEWED & APPROVED BY COMMITTEE: **YES** ☒ on 3/08/10 **NO** ☐ **N/A** ☐

ITEM HISTORY (PREVIOUS VILLAGE BOARD REVIEWS, ACTIONS RELATED TO THIS ITEM, OTHER PERTINENT HISTORY)

Spring Green Lawn and Tree Care currently provides landscape fertilization services to the Village in the form of fertilization and weed control through six (6) annual applications on parks, rights-of-ways, and the other Village owned facilities (e.g., Village Hall, pump house, water towers). Staff is very pleased with the quality of services currently provided by Spring Green and the resulting turf management aspects of our parks and rights-of-ways. Therefore, staff has asked Spring Green whether they would consider a contract extension for a subsequent season with no price increase. Spring Green responded that although the cost of the products they apply have risen, to keep the contract with the Village they would agree to another one-year contract extension and would not seek a rate increase. Therefore, the rate we would pay for the 10/11 season would be the same as the 09/10 season. This is the second consecutive year that Spring Green has agreed to extend its contract prices for a subsequent year.

The Municipal Services Committee has discussed this item at their regular meeting on March 8, 2010 and recommends that the Village Board approve a contract extension with Spring Green with no increase in price.

ITEM COMMENTARY (BACKGROUND, DISCUSSION, RECOMMENDATIONS, ETC.)

Staff recommends that the competitive bidding process be waived and that a one-year contract extension be awarded to Spring Green Lawn and Tree Care at the same price as the 2009 season.

ACTION PROPOSED:

Adopt the resolution.

RESOLUTION NO. 10-R-15

A RESOLUTION WAIVING THE COMPETITIVE BIDDING PROCESS AND AUTHORIZING THE VILLAGE PRESIDENT AND VILLAGE CLERK TO EXECUTE A CERTAIN AGREEMENT – LANDSCAPE FERTILIZATION SERVICES – BETWEEN THE VILLAGE OF WILLOWBROOK AND SPRING GREEN LAWN AND TREE CARE

WHEREAS, in the opinion of at least two-thirds (2/3) of the Trustees then holding office, it is in the best interests of the Village to waive the competitive bidding process and to authorize the President and Village Clerk to execute an Agreement with Spring Green Lawn and Tree Care, for the purposes of providing landscape fertilization services to the Village of Willowbrook.

NOW, THEREFORE, BE IT RESOLVED by the President and Board of Trustees of the Village of Willowbrook, DuPage County, Illinois, as follows;

SECTION ONE: That the competitive bidding process be waived and that the President and Village Clerk be and the same are hereby authorized to execute an Agreement with Spring Green Lawn and Tree Care, in substantially the same form attached hereto as Exhibit "A" and made a part hereof, for the purposes of Spring Green Lawn and Tree Care providing landscape fertilization services to the Village of Willowbrook.

SECTION TWO: That all resolutions or parts thereof, in conflict with the provisions of this Resolution are, to the extent of such conflict, expressly repealed.

SECTION THREE: That this Resolution shall be in full force and effect from and after its adoption, approval and publication in pamphlet form as provided by law.

ADOPTED and APPROVED this 12th day of April, 2010.

APPROVED:

_____
Village President

ATTEST:

_____
Village Clerk

ROLL CALL VOTE: AYES:_____

NAYS:_____

ABSTENTIONS:_____

ABSENT:_____

AGREEMENT

THIS AGREEMENT made and entered into this 12 day of April, 2010, by and between the Village of Willowbrook, a municipal corporation of the State of Illinois, and Best Quality Cleaning, Inc.

WITNESSETH:

WHEREAS, the Constitution of the State of Illinois, 1970, Article VII, Section 10, provides in part that units of local government, including municipalities, may contract with individuals in any manner not prohibited by law or by ordinance.

WHEREAS, by Resolution 09-R-10, the Village President and Village Clerk were authorized to execute, and did execute, a certain contract with Spring Green Lawn and Tree Care for the purposes of providing landscape fertilization services to the Village of Willowbrook for the period from May 1, 2009, to April 30, 2010, a copy of which is attached hereto and incorporated herein as Exhibit "A" ("Contract"); and,

WHEREAS, the Village has determined it is in the best interests of the Village to extend the term of the Contract from May 1, 2010, to April 30, 2011, with the total amount not to exceed $22,568.70; and,

WHEREAS, Spring Green Lawn and Tree Care has agreed to provide such services as set forth in the Contract for a total cost amount not to exceed $22,568.70, as agreed to by a letter to the Village dated February 25, 2010, which is attached hereto and incorporated herein as Exhibit "B".

NOW, THEREFORE, in consideration of the foregoing recitals and the mutual covenants, conditions and agreements herein contained, the adequacy and sufficiency of which the parties hereto hereby acknowledge, the parties hereto agree as follows:

Section 1. Incorporation of Recitals. The preambles set forth hereinabove are incorporated herein as substantive provisions of this AGREEMENT as if fully set out in this Section 1.

Section 2. The Village and Spring Green Lawn and Tree Care hereby extend the term of the Contract for the period from May 1, 2010, to April 30, 2011, with the total cost amount not to exceed $22,568.70.

Section 3. Notwithstanding anything to the contrary, Spring Green Lawn and Tree Care hereby agrees to provide current insurance certificates and insurance coverage information for the period from May 1, 2010, to April 30, 2011, as otherwise described and set forth in the Contract.

Section 4. This AGREEMENT is executed in multiple counterparts, each of which shall be deemed to be and shall constitute one and the same instrument.

IN WITNESS WHEREOF, the parties hereto have set their hands and seals on the date first above written.

VILLAGE OF WILLOWBROOK, an Illinois
Municipal Corporation,

By:_____
Village President

ATTEST:

_____
Village Clerk

Spring Green Lawn and Tree Care

By: Armand D'Agostino

Its: Commercial Sales Mgr

ATTEST:

EXHIBIT "A" TO AGREEMENT

ATTACH FULLY EXECUTED COPY OF THE FOLLOWING:

SPECIFICATIONS AND CONTRACT DOCUMENTS
FOR
LANDSCAPE FERTILIZATION SERVICES FOR VILLAGE PARKS & ROADSIDE RIGHTS OF WAY, MEDIANS, AND SPECIFIED FACILITIES

CONTRACT PERIOD: MAY 1, 2009 - APRIL 30, 2010

BIDDER: SPRING GREEN LAWN CARE, 11927 SPAULDING SCHOOL DRIVE, PLAINFIELD, IL 60544

APPROXIMATELY FIFTY (50) PAGES

RESOLUTION NO. 09-R-10

A RESOLUTION WAIVING THE COMPETITIVE BIDDING PROCESS AND AUTHORIZING THE VILLAGE PRESIDENT AND VILLAGE CLERK TO EXECUTE A CERTAIN AGREEMENT – LANDSCAPE FERTILIZATION SERVICES – BETWEEN THE VILLAGE OF WILLOWBROOK AND SPRING GREEN LAWN AND TREE CARE

WHEREAS, in the opinion of at least two-thirds (2/3) of the Trustees then holding office, it is in the best interests of the Village to waive the competitive bidding process and to authorize the President and Village Clerk to execute an Agreement with Spring Green Lawn and Tree Care, for the purposes of providing landscape fertilization services to the Village of Willowbrook.

NOW, THEREFORE, BE IT RESOLVED by the President and Board of Trustees of the Village of Willowbrook, DuPage County, Illinois, as follows;

SECTION ONE: That the competitive bidding process be waived and that the President and Village Clerk be and the same are hereby authorized to execute an Agreement with Spring Green Lawn and Tree Care, in substantially the same form attached hereto as Exhibit "A" and made a part hereof, for the purposes of Spring Green Lawn and Tree Care providing landscape fertilization services to the Village of Willowbrook.

SECTION TWO: That all resolutions or parts thereof, in conflict with the provisions of this Resolution are, to the extent of such conflict, expressly repealed.

SECTION THREE: That this Resolution shall be in full force and effect from and after its adoption, approval and publication in pamphlet form as provided by law.

EXHIBIT "A"

AGREEMENT

THIS AGREEMENT made and entered into this 23 day of March, 2009, by and between the Village of Willowbrook, a municipal corporation of the State of Illinois, and Best Quality Cleaning, Inc.

WITNESSETH:

WHEREAS, the Constitution of the State of Illinois, 1970, Article VII, Section 10, provides in part that units of local government, including municipalities, may contract with individuals in any manner not prohibited by law or by ordinance.

WHEREAS, by Resolution 08-R-14, the Village President and Village Clerk were authorized to execute, and did execute, a certain contract with Spring Green Lawn and Tree Care for the purposes of providing landscape fertilization services to the Village of Willowbrook for the period from May 1, 2008, to April 30, 2009, a copy of which is attached hereto and incorporated herein as Exhibit "A" ("Contract"); and,

WHEREAS, the Village has determined it is in the best interests of the Village to extend the term of the Contract from May 1, 2009, to April 30, 2010, with the total amount not to exceed $22,568.70; and,

WHEREAS, Spring Green Lawn and Tree Care has agreed to provide such services as set forth in the Contract for a total cost amount not to exceed $22,568.70, as agreed to by a letter to the Village dated March 10, 2009, which is attached hereto and incorporated herein as Exhibit "B".

NOW, THEREFORE, in consideration of the foregoing recitals and the mutual covenants, conditions and agreements herein contained, the adequacy and sufficiency of which the parties hereto hereby acknowledge, the parties hereto agree as follows:

Spring Green Lawn and Tree Care

By: Armand D'Agostino

Its: Commercial Sales Mgr

ATTEST:

EXHIBIT "A"

RESOLUTION NO. 08-R-14

A RESOLUTION WAIVING THE COMPETITIVE BIDDING PROCESS AND AUTHORIZING THE VILLAGE PRESIDENT AND VILLAGE CLERK TO EXECUTE A CERTAIN AGREEMENT - LANDSCAPE FERTILIZATION SERVICES - BETWEEN THE VILLAGE OF WILLOWBROOK AND SPRING GREEN LAWN AND TREE CARE

WHEREAS, in the opinion of at least two-thirds (2/3) of the Trustees then holding office, it is in the best interests of the Village to waive the competitive bidding process and to authorize the President and Village Clerk to execute an Agreement with Spring Green Lawn and Tree Care, for the purposes of providing landscape fertilization services to the Village of Willowbrook.

NOW, THEREFORE, BE IT RESOLVED by the President and Board of Trustees of the Village of Willowbrook, DuPage County, Illinois, as follows;

SECTION ONE: That the competitive bidding process be waived and that the President and Village Clerk be and the same are hereby authorized to execute an Agreement with Spring Green Lawn and Tree Care, in substantially the same form attached hereto as Exhibit "A" and made a part hereof, for the purposes of Spring Green Lawn and Tree Care providing landscape fertilization services to the Village of Willowbrook.

SECTION TWO: That all resolutions or parts thereof, in conflict with the provisions of this Resolution are, to the extent of such conflict, expressly repealed.

SECTION THREE: That this Resolution shall be in full force and effect from and after its adoption, approval and publication in pamphlet form as provided by law.

ADOPTED and APPROVED this 24th day of March, 2008.

APPROVED:

Robert A. Napoli
Village President Pro Tem

ATTEST:

Leroy R. Hansen
Village Clerk

ROLL CALL VOTE: AYES: Baker, Mistele, Brown, Napoli, Schaenbeck, McMahon

NAYS: 0

ABSTENTIONS: 0

ABSENT: 0

AGREEMENT

THIS AGREEMENT made and entered into this 24 day of March, 2008, by and between the Village of Willowbrook, a municipal corporation of the State of Illinois, and Best Quality Cleaning, Inc.

W I T N E S S E T H:

WHEREAS, the Constitution of the State of Illinois, 1970, Article VII, Section 10, provides in part that units of local government, including municipalities, may contract with individuals in any manner not prohibited by law or by ordinance.

WHEREAS, by Resolution 07-R-10, the Village President and Village Clerk were authorized to execute, and did execute, a certain contract with Spring Green Lawn and Tree Care for the purposes of providing landscape fertilization services to the Village of Willowbrook for the period from May 1, 2007, to April 30, 2008, a copy of which is attached hereto and incorporated herein as Exhibit "A" ("Contract"); and,

WHEREAS, the Village has determined it is in the best interests of the Village to extend the term of the Contract from May 1, 2008, to April 30, 2009, with the total amount not to exceed $22,568.70; and,

WHEREAS, Spring Green Lawn and Tree Care has agreed to provide such services as set forth in the Contract for a total cost amount not to exceed $22,568.70, as agreed to by a letter to

the Village dated February 28, 2008, which is attached hereto and incorporated herein as Exhibit "B".

NOW, THEREFORE, in consideration of the foregoing recitals and the mutual covenants, conditions and agreements herein contained, the adequacy and sufficiency of which the parties hereto hereby acknowledge, the parties hereto agree as follows:

Section 1. Incorporation of Recitals. The preambles set forth hereinabove are incorporated herein as substantive provisions of this AGREEMENT as if fully set out in this Section 1.

Section 2. The Village and Spring Green Lawn and Tree Care hereby extend the term of the Contract for the period from May 1, 2008, to April 30, 2009, with the total cost amount not to exceed $22,568.70.

Section 3. Notwithstanding anything to the contrary, Spring Green Lawn and Tree Care hereby agrees to provide current insurance certificates and insurance coverage information for the period from May 1, 2008, to April 30, 2009, as otherwise described and set forth in the Contract.

Section 4. This AGREEMENT is executed in multiple counterparts, each of which shall be deemed to be and shall constitute one and the same instrument.

IN WITNESS WHEREOF, the parties hereto have set their hands and seals on the date first above written.

VILLAGE OF WILLOWBROOK, an Illinois municipal corporation,

By: Robert A. Napoli
Village President Pro Tem

ATTEST:

Lynn A. Hansen
Village Clerk

Spring Green Lawn and Tree Care

By: Armand D'Agostino
Its: COMMERCIAL SALES MGR.

ATTEST:

Megan E. Malevaski

EXHIBIT "A" TO AGREEMENT

ATTACH FULLY EXECUTED COPY OF THE FOLLOWING:

SPECIFICATIONS AND CONTRACT DOCUMENTS
FOR
LANDSCAPE FERTILIZATION SERVICES FOR VILLAGE PARKS & ROADSIDE RIGHTS OF WAY, MEDIANS, AND SPECIFIED FACILITIES

CONTRACT PERIOD: MAY 1, 2007 - APRIL 30, 2008

BIDDER: SPRING GREEN LAWN CARE, 11927 SPAULDING SCHOOL DRIVE, PLAINFIELD, IL 60544

APPROXIMATELY THIRTY-SEVEN (37) PAGES

RESOLUTION NO. 07-R-10

A RESOLUTION AUTHORIZING THE VILLAGE PRESIDENT AND VILLAGE CLERK TO EXECUTE A CERTAIN CONTRACT - LANDSCAPE FERTILIZATION SERVICE - SPRING-GREEN LAWN CARE

BE IT RESOLVED by the President and Board of Trustees of the Village of Willowbrook, DuPage County, Illinois, that the Village President and Village Clerk be and the same are hereby authorized to execute a certain contract, Spring-Green Lawn Care, for the 2007-2008 Landscape Fertilization Contract in an amount not to exceed $21,494.00, as set forth in the contract attached hereto as Exhibit "A" which is, by this reference, expressly incorporated herein.

ADOPTED and APPROVED this 26th day of March, 2007.

APPROVED:

Village President

ATTEST:

Village Clerk

ROLL CALL VOTE: AYES: Mistele, Brown, Napoli, Schoenbeck, McMahon

NAYS: 0

ABSTENTIONS: 0

ABSENT: Baker

AFFIDAVIT

Customer	5326
Reference	1470 Fertilizer
Amount:	$81.80

VILLAGE OF WILLOWBROOK
7760 QUINCY ST
WILLOWBROOK, IL 60521

Linda M. Siebolds, agent of Liberty Suburban Chicago Newspapers, HEREBY CERTIFIES that he/she is Legal Advertising Manager of Liberty Suburban Chicago Newspapers, that said Liberty Suburban Chicago Newspapers is a secular newspaper and has been published weekly in the Village of Willowbrook, in the county of DuPage in the state of Illinois, continuously for more than one year prior to, on and since the date of the first publication of the notice hereinafter referred to and is of general circulation throughout the county and the state.

That said agent hereby certifies that Liberty Suburban Chicago Newspapers is a newspaper as defined in Chapter 715 et seq. of the Illinois Revised Statutes.

That a notice, of which the annexed printed slip is a true copy, was published 1 (one) time in said Liberty Suburban Chicago Newspapers, namely, once each week for one successive week(s). The first publication of said notice as aforesaid was made in said newspaper dated and published on the 17th day of February A.D. 2007 and the last publication thereof was made in said newspaper dated and published on 17th day of February A.D. 2007.

IN WITNESS WHEREOF, the undersigned has caused this certification to be signed this 17th day of February A.D. 2007.

Linda M. Siebolds

Linda M. Siebolds
Legal Advertising Manager
Liberty Suburban Chicago Newspapers

LEGAL NOTICE/PUBLIC NOTICE

REQUEST FOR BIDS

Notice is hereby given that the Village of Willowbrook is seeking bids for **LANDSCAPE FERTILIZATION SERVICES**, in accordance with specifications currently on file and which may be picked up in the office of the Village of Willowbrook Village Hall, located at 7760 Quincy Street, Willowbrook, Illinois 60527. Completed bids are due in the office of the Willowbrook Village Hall no later than 10:15 am on March 5, 2007, where said bids will be opened and publicly read aloud. The Village of Willowbrook reserves the right to reject any or all bids or to accept any bid which, in its judgment, will be in the best interest of the public. No bid shall be withdrawn after opening of bids without the consent of the Village of Willowbrook, Willowbrook, Illinois, for a period of sixty (60) days. Only bids responsive to the provisions of the specifications will be considered.

February 17, 2007
Liberty Suburban Newspapers 1470 WIL

Village of Willowbrook
7760 Quincy Street Willowbrook, Illinois 60521-5594
708-323-8215
Fax 708-323-0787

GARY PRETZER
PRESIDENT
BERNARD A. OGLIETTI
VILLAGE ADMINISTRATOR
PATRICK T. SPATAFORE
VILLAGE CLERK

PROJECT: LANDSCAPE FERTILIZATION SERVICES

DATE AND TIME OF BID OPENING: 3/5/07 @ 10:15 AM

DATE	PROPOSAL OF	TYPE OF SECURITY	BIDDERS PROPOSAL
2/28	SPRING GREEN	5% SURETY	12,590.00 PARKS
			8,904.00 ROW'S
			21,494.00 TOTAL

THE AMERICAN INSTITUTE OF ARCHITECTS

AIA Document A310

Bid Bond

KNOW ALL MEN BY THESE PRESENTS, that we Superior Lawns dba Spring-Green Lawn Care Corp.
11927 Spaulding School Drive
Plainfield, Il. 60544
as Principal, hereinafter called the Principal, and Travelers Casualty and Surety Company of America

a corporation duly organized under the laws of the State of Connecticut
as Surety, hereinafter called the Surety, are held and firmly bound unto The Village of Willowbrook
7760 Quincy Street
Willowbrook, Il. 60527

as Obligee, hereinafter called the Obligee, in the sum of Five percent of the amount of bid

Dollars (5%).
for the payment of which sum well and truly to be made, the said Principal and the said Surety, bind ourselves, our heirs, executors, administrators, successors and assigns, jointly and severally, firmly by these presents.

WHEREAS, the Principal has submitted a bid for Landscape Fertilization Services for Village Parks & Roadside Rights of Way, Medians, and Specified Facilities

NOW, THEREFORE, if the Obligee shall accept the bid of the Principal and the Principal shall enter into a Contract with the Obligee in accordance with the terms of such bid, and give such bond or bonds as may be specified in the bidding or Contract Documents with good and sufficient surety for the faithful performance of such Contract and for the prompt payment of labor and material furnished in the prosecution thereof, or in the event of the failure of the Principal to enter such Contract and give such bond or bonds, if the Principal shall pay to the Obligee the difference not to exceed the penalty hereof between the amount specified in said bid and such larger amount for which the Obligee may in good faith contract with another party to perform the Work covered by said bid, then this obligation shall be null and void, otherwise to remain in full force and effect.

Signed and sealed this 2nd day of March, 2007.

Sandra L Maki
(Witness)

Superior Lawns dba Spring-Green Lawn Care Corp.
(Principal)
President
(Title)

Nancy G Smith
(Witness)

Travelers Casualty and Surety Company of America
(Surety)
Dolores Butcher
Dolores Butcher, Attorney-in-Fact *(Title)*

WARNING: THIS POWER OF ATTORNEY IS INVALID WITHOUT THE RED BORDER

ST PAUL TRAVELERS

POWER OF ATTORNEY

Farmington Casualty Company
Fidelity and Guaranty Insurance Company
Fidelity and Guaranty Insurance Underwriters, Inc.
Seaboard Surety Company
St. Paul Fire and Marine Insurance Company
St. Paul Guardian Insurance Company
St. Paul Mercury Insurance Company
Travelers Casualty and Surety Company
Travelers Casualty and Surety Company of America
United States Fidelity and Guaranty Company

Attorney-In Fact No. 215996

Certificate No. 000378531

KNOW ALL MEN BY THESE PRESENTS: That Seaboard Surety Company is a corporation duly organized under the laws of the State of New York, that St. Paul Fire and Marine Insurance Company, St. Paul Guardian Insurance Company and St. Paul Mercury Insurance Company are corporations duly organized under the laws of the State of Minnesota, that Farmington Casualty Company, Travelers Casualty and Surety Company, and Travelers Casualty and Surety Company of America are corporations duly organized under the laws of the State of Connecticut, that United States Fidelity and Guaranty Company is a corporation duly organized under the laws of the State of Maryland, that Fidelity and Guaranty Insurance Company is a corporation duly organized under the laws of the State of Iowa, and that Fidelity and Guaranty Insurance Underwriters, Inc. is a corporation duly organized under the laws of the State of Wisconsin (herein collectively called the "Companies"), and that the Companies do hereby make, constitute and appoint

William J. Kamm, Nancy Smith, Charles F. Biersborn, Jr., and Dolores Butcher

of the City of Medinah, State of Illinois, their true and lawful Attorney(s)-in-Fact, each in their separate capacity if more than one is named above, to sign, execute, seal and acknowledge any and all bonds, recognizances, conditional undertakings and other writings obligatory in the nature thereof on behalf of the Companies in their business of guaranteeing the fidelity of persons, guaranteeing the performance of contracts and executing or guaranteeing bonds and undertakings required or permitted in any actions or proceedings allowed by law.

WARNING: THIS POWER OF ATTORNEY IS INVALID WITHOUT THE RED BORDER

IN WITNESS WHEREOF, the Companies have caused this instrument to be signed and their corporate seals to be hereto affixed, this 1st day of May, 2006.

Farmington Casualty Company
Fidelity and Guaranty Insurance Company
Fidelity and Guaranty Insurance Underwriters, Inc.
Seaboard Surety Company
St. Paul Fire and Marine Insurance Company
St. Paul Guardian Insurance Company
St. Paul Mercury Insurance Company
Travelers Casualty and Surety Company
Travelers Casualty and Surety Company of America
United States Fidelity and Guaranty Company

State of Connecticut
City of Hartford ss.

By: George W. Thompson, Senior Vice President

On this the 1st day of May, 2006, before me personally appeared George W. Thompson, who acknowledged himself to be the Senior Vice President of Farmington Casualty Company, Fidelity and Guaranty Insurance Company, Fidelity and Guaranty Insurance Underwriters, Inc., Seaboard Surety Company, St. Paul Fire and Marine Insurance Company, St. Paul Guardian Insurance Company, St. Paul Mercury Insurance Company, Travelers Casualty and Surety Company, Travelers Casualty and Surety Company of America, and United States Fidelity and Guaranty Company, and that he, as such, being authorized so to do, executed the foregoing instrument for the purposes therein contained by signing on behalf of the corporations by himself as a duly authorized officer.

In Witness Whereof, I hereunto set my hand and official seal.
My Commission expires the 30th day of June, 2006.

Marie C. Tetreault, Notary Public

58440-9-05 Printed in U.S.A.

WARNING: THIS POWER OF ATTORNEY IS INVALID WITHOUT THE RED BORDER

SPECIFICATIONS AND CONTRACT DOCUMENTS
For

LANDSCAPE FERTILIZATION SERVICES FOR VILLAGE PARKS &ROADSIDE RIGHTS OF WAY, MEDIANS, AND SPECIFIED FACILITIES

Required For Use By:

VILLAGE OF WILLOWBROOK
Willowbrook, Illinois 60527

CONTRACTOR'S CERTIFICATION - BID PROPOSAL - PAGE 16
** MUST BE EXECUTED AND NOTARIZED **
BIDS TO BE EXECUTED IN DUPLICATE
ALL SIGNATURES TO BE SWORN BEFORE A NOTARY PUBLIC
ALL INSURANCE REQUIREMENTS MUST BE MET

CONTRACT PERIOD:	MAY 1, 2007 – APRIL 30, 2008	
ACCOUNT NUMBER:	_____	
BID DEPOSIT: *Certified Check, Bank Cashier's Check or Bid Bond)*	5% of Bid Amount	*(See Page 4)*
PERFORMANCE BOND(S) REQUIRED:	YES	(See Page 4)
DRAWINGS:	NONE	
BID OPENING - DATE/TIME/LOCATION:	**10:15 AM CST March 5, 2007** WILLOWBROOK VILLAGE HALL 7760 Quincy Street Willowbrook, Illinois 60527	

Issued by: Administration Department
Village of Willowbrook, Illinois
7760 Quincy Street
Willowbrook, Illinois 60527
(630) 323-8215

Philip J. Modaff
Village Administrator

Sue Stanish
Director of Finance

BID NOTICE

The Village of Willowbrook will be accepting sealed bids for the item(s) listed. Bids will be accepted at the Willowbrook Village Hall, 7760 Quincy Street, Willowbrook, until at the time(s) shown below, at which time they will be opened and publicly read aloud.

Bid Item: **Landscape Fertilization Services For Village Parks &Roadside Rights of Way, Medians, and Specified Facilities**

Bid Opening: **10:15 AM CST March 5, 2007**

Specifications may be obtained at the Village Hall, weekdays, between 8:30 a.m. and 4:30 p.m. Questions may be directed to the Administration Department at (630) 323-8215.

In accordance with the law and the provisions of 820ILCS 130/0.01 et seq., entitled "an Act regulating wages of laborers, mechanics, and other workers employed in any public works by the state, county, city or any public body or any political subdivision or by any one under contract for public works", not less than the prevailing rate of wages shall be paid to all laborers, workmen and mechanics performing work under this contract.

The Village of Willowbrook reserves the right to reject any or all bids, to waive technicalities, and to accept any bid which is deemed to be in the best interest of the Village of Willowbrook.

The Village of Willowbrook, Illinois, does not discriminate on the basis of disability in the admission or access to, treatment or employment in, its services, programs, or activities. Upon request, accommodation will be provided to allow individuals with disabilities to participate in all Village of Willowbrook services, programs, and activities. The Village has a designated coordinator to facilitate compliance with the Americans with Disabilities Act of 1990 (ADA), as required by Section 35.107 of the U.S. Department of Justice regulation, and to coordinate compliance with Section 504 of the Rehabilitation Act of 1973, as mandated by Section 8.5 of the U.S. Department of Housing and Urban Development regulations. For information, contact the Tim Halik, Village of Willowbrook, 7760 Quincy Street, Willowbrook, Illinois, 60527; (630) 323-8215, TDD (630)920-2259.

Upon request, this information can be made available in large print, audiotape, and/or computer disk.

EXHIBIT "A"

I. GENERAL CONDITIONS

A. DEFINITIONS

The following words and phrases, as used herein, shall have the meaning ascribed to them, as follows:

A. BIDDER shall mean:

SPRING - GREEN LAWN CARE
11927 SPAULDING SCHOOL DR
PLAINFIELD, IL 60544

B. VILLAGE shall mean the Village of Willowbrook, DuPage County Illinois, an Illinois Municipal Corporation.

B. PREPARATION AND SUBMISSION OF PROPOSAL

The Bidder must submit his/her proposal in duplicate on the forms furnished by the Village of Willowbrook. All blank spaces on the proposal form must be filled in if applicable. Authorized signature must be the individual owner of a proprietorship, a general partner of a partnership or a duly authorized officer, attested to by the Corporate Secretary, of a Corporation. The proposal is contained in these documents and must remain attached thereto when submitted. All signatures and spaces are to be completed in ink or typewritten, where applicable. Prices/costs shall be in United States dollars. Incorrect completion, execution or submission of bids shall be sufficient grounds for rejection of a bid. **The following documents <u>shall be executed</u> at the time of submission of a bid:**

Contractor's Certification Bid Proposal - Page #16
BID PROPOSAL PAGE

ALL PROPOSALS SHALL BE SUBMITTED IN SEALED ENVELOPES CARRYING THE FOLLOWING INFORMATION ON THE FACE:

BIDDER'S NAME, ADDRESS, SUBJECT MATTER OF BID, DESIGNATED DATE OF BID OPENING AND HOUR DESIGNATED FOR BID OPENING.

C. WITHDRAWAL OF PROPOSAL

Bidders may withdraw their bids at any time prior to the time specified in the Bid Notice as the closing time for the receipt of bids.

However, no bid shall be withdrawn or cancelled for a period of sixty (60) calendar days after said advertised closing time for the receipt of bids, nor shall the successful bid be withdrawn, cancelled, or modified after having been accepted by the Village.

D. SUBMISSION OF ALTERNATE BIDS

Bidder may submit alternate bids provided that:

1. Cash bid proposals meet Village Specifications and are submitted separately.
2. The Village shall not consider an alternate bid which fails to meet specifications.

E. BID DEPOSIT

When required on Page 1 of these Specifications, all bids shall be accompanied by a bid deposit in the amount specified. Bid deposits shall be in the form of a certified check, a bank cashier's check drawn on a responsible bank doing business in the United States and shall be made payable to the Village of Willowbrook, or bid bond.

The bid deposit of all except the three lowest bidders on each contract will be returned within twenty (20) calendar days after the opening of the bids. The remaining bid deposits on each contract will be returned, with the exception of the accepted Bidder, after the contract is awarded. The bid deposit of the accepted Bidder will be returned after acceptance by the Village of satisfactory performance bond where such bond is required or completion of contract where no performance bond is required.

F. SECURITY FOR PERFORMANCE

When required on Page 1 of these Specifications, the successful Bidder or Bidders shall, within thirteen (13) calendar days after acceptance of the bid by the Village, furnish a performance bond in the full amount of the contract, in a form acceptable to the Village.

In the event that the successful Bidder(s) fails to furnish the performance bond within thirteen (13) calendar days after acceptance of the bid by the Village, then the bid deposit of the successful Bidder shall be retained by the Village as liquidated damages and not as a penalty, it being agreed by the successful Bidder that said sum is a fair estimate of the amount of damages that said Village will sustain due to the successful Bidder's failure to furnish said bond.

G. EQUIVALENT PRODUCTS

In cases where a specified item is identified by a manufacturer's name, trade name or other reference, it is understood that the Bidder proposes to furnish the item as identified. If the Bidder proposes to furnish an "equal" item, the proposed "equal" item must be so indicated in the bid proposal. The Village shall be the sole determiner of the equalness of the substitute offered.

H. BASIS OF AWARD

The Village reserves the right to accept or reject any and all bids, in whole or in part, and to waive technicalities.

I. **ACCEPTANCE OF BID**

The Village shall make its determination with respect to bids within sixty (60) days, or within ninety (90) days where approval by other agencies is required, from the date of opening of bids. Should the Village fail to act within the times herein specified, all bids shall be rendered null and void.

J. **CATALOGS**

Each Bidder shall submit catalogs, descriptive literature and detailed drawings, fully detailing features, designs, construction, appointments, finishes and the like, in order to fully describe the material or work proposed to be furnished.

K. **DELIVERY**

All materials shipped to the Village of Willowbrook must be shipped F.O.B. freight prepaid, designated location Willowbrook, Illinois. The materials must then be delivered where directed, and unloaded by the successful Bidder, or his/her agent. All deliveries shall be deemed to be "inside delivery". Truck deliveries shall be accepted before 2:30 p.m. on weekdays only. No deliveries shall be accepted on Saturdays, Sundays or holidays. The quantity of material delivered by truck shall be ascertained from a weight certificate issued by a duly licensed public weight-master. In the case of delivery by rail, weight will be ascertained from bill of lading from originating line, but the Village reserves the right to re-weigh at the nearest available railroad scale.

L. **GUARANTEES AND WARRANTEES**

All guarantees and warrantees required shall be furnished by the successful Bidder and shall be delivered to the Village before the final payment voucher is issued.

M. **SUBLETTING OR ASSIGNMENT OF CONTRACT OR CONTRACT FUNDS**

No contract awarded by the Village of Willowbrook shall be assigned, in whole or in part, or any part of the same sub-contracted without the written consent of the Village Administrator. In no case shall such consent relieve the successful Bidder from his/her obligations or change the terms of the contract.

Any and all subcontractors shall be bound by contract to the same terms as the successful Bidder. Prior to commencing any work, subcontractors must place on file with the Village a certificate of insurance as outlined under "insurance".

The successful Bidder shall not transfer or assign any contract funds or claims due or to become due without the written approval of the Village Administrator having first been obtained.

N. **COMPETENCY OF BIDDER**

No bid shall be accepted from, or contract awarded to, any person, firm or corporation that is in arrears or is in default to the Village of Willowbrook upon any debt contract, or other obligation or who has failed to perform faithfully any previous contract with the Village.

The Bidder, if required, must present within forty-eight (48) hours evidence satisfactory to the Village of performance ability, possession of necessary facilities, equipment, pecuniary resources and adequate insurance to comply with the terms of these specifications and contract documents. The Village hereby reserves the right to reject

any bid submitted by a Bidder who, in the sole and exclusive discretion of the Village, cannot completely perform the services or deliver the goods specified in these specifications.

O. COMPLIANCE WITH OSHA STANDARDS, THE AMERICANS WITH DISABILITIES ACT, VILLAGE ORDINANCES AND STATE LAWS

The equipment supplied to the Village of Willowbrook must comply with all requirements and standards as specified by the Occupational Safety and Health Act. All guards and protectors as well as appropriate markings will be in place before delivery. Items not meeting any OSHA specifications will be refused. Bidder may be required at his/her expense to provide training to Village employees in the operation of equipment and its maintenance at the convenience of the Village.

Each contracting agency shall ensure that every contract to which it is a party shall comply with all relevant aspects of the Americans with Disabilities Act.

The Bidder will strictly comply with all ordinances of the Village of Willowbrook, the laws of the State of Illinois and United States Government.

P. SPECIAL HANDLING

Prior to delivery of any product which is caustic, corrosive, flammable or dangerous to handle, the successful Bidder will provide written directions as to methods of handling such products, as well as the antidote or neutralizing material required for first aid.

Q. MATERIAL INSPECTION AND RESPONSIBILITY

The Village shall have a right to inspect any material to be used in carrying out this contract. The Village does not assume any responsibility for the availability of any materials and equipment required under this contract.

R. TOXIC SUBSTANCES

Successful Bidder shall notify the Village of, and provide material safety data sheets for all substances used or supplied in connection with this contract which are defined as toxic under the Illinois Toxic Substances Disclosure to Employees Act.

Materials, components, or completed work not complying therewith, may be rejected by the Village and shall be replaced by the successful Bidder at no cost to the Village. Any materials or components rejected shall be removed within a reasonable time from the premises of the Village at the expense of the successful Bidder.

S. PRICE REDUCTIONS

If at any time after a contract is awarded the successful Bidder(s) makes a general price reduction in the comparable price of any material covered by the contract to customers generally, an equivalent price reduction based on similar quantities and/or considerations shall apply to the contract for the duration of the contract period (or until the price is further reduced). Such price reduction shall be effective at the same time and in the same manner as the reduction in the price to customers generally. For the purpose of this provision, a "general price reduction" shall mean any horizontal reduction in the price of an article or service offered (1) to successful Bidder's customers generally, or (2) in the successful Bidder's price schedule for the class of customers, i.e., wholesalers, jobbers, retailers, etc., which was used as the basis for bidding on this contract. An occasional sale at a lower price, or sale of distressed merchandise at a lower price, would not be

considered a "general price reduction" under this provision. The successful Bidder shall invoice the Village at such reduced prices indicating on the invoice that the reduction is pursuant to the "price reduction" provision of this contract. The successful Bidder, in addition, shall within ten (10) days of any general price reduction, notify the Village Administrator of such reduction by letter. Failure to do so may result in termination of the contract.

T. TERMINATION OF CONTRACT

1. The Village may, by written notice of default to the successful Bidder, terminate the whole or part of this contract in any one of the following circumstances:

A. If the successful Bidder fails to make delivery of the supplies or to perform the services within the time specified herein or any extension thereof; or fails to provide the supplies or to perform the service at the exact price accepted by the Village (and any charges for contract changes mutually agreed to by the Village and the successful Bidder); or

B. If the successful Bidder fails to perform any of the other provisions of this contract, or so fails to make progress as to endanger performance of this contract in accordance with its terms, and in either of these two circumstances does not cure such failure within such period of time as the Village Administrator may direct in writing.

C. If it is determined that successful Bidder knowingly falsified information provided to the Village.

D. If it is determined that successful Bidder offered substantial gifts or gratuities to a Village official, employee, or agent whether in their official capacity or not.

E. Any order is entered in any proceeding against the successful Bidder decreeing the dissolution of the successful Bidder and such order remains in effect for sixty (60) days.

F. The successful Bidder shall apply to any tribunal for the appointment of a trustee or receiver of any part of the assets of the successful Bidder, or commence any proceedings relating to the successful Bidder under any bankruptcy, reorganization, arrangement, insolvency, readjustment of debt, dissolution or other liquidation law of any jurisdiction, or any such application shall be filed, or any such proceedings shall be commenced, against the successful Bidder, and the successful Bidder indicates its approval, consent or acquiescence, or an order shall be entered appointing such trustee or receiver or adjudicating the successful Bidder bankrupt or insolvent, or approving the petition in any such proceeding, and such order remains in effect for sixty (60) days.

G. In the event the Village terminates this contract in whole or in part as provided in Paragraph (A) of this clause, the Village may procure, upon such terms in such manner as the Village Administrator may deem appropriate, supplies or services similar to those so terminated, and the successful Bidder shall be liable to the Village for any excess costs for such similar supplies or service, provided that the successful Bidder shall continue the performance of this contract to the extent not terminated under the provisions of this clause.

U. EQUAL EMPLOYMENT OPPORTUNITY

Each contracting agency shall ensure every contract to which it is a party shall contain the following clause.

EQUAL EMPLOYMENT OPPORTUNITY

In the event of the contractor's non-compliance with the provisions of this equal employment opportunity clause, the Illinois Human Rights Act or the Rules and Regulations of the Illinois Department of the Human Rights ("Department"), the Contractor may be declared ineligible for future contracts or subcontracts with the State of Illinois or any of its political subdivisions or municipal corporations, and the contract may be cancelled or voided in whole or in part, and such other sanctions or penalties may be imposed or remedies invoked as provided by statute or regulation. During the performance of this contract, the contractor agrees as follows:

1. That it will not discriminate against any employee or applicant for employment because of race, color, religion, sex, marital status, national origin, or ancestry, age, physical or mental handicap unrelated to ability, or an unfavorable discharge from the military service; and further that it will examine all job classifications to determine if minority persons or women are under utilized and will take appropriate affirmative action to rectify any such under utilization.

2. That, if it hires additional employees in order to perform this contract or any portion thereof, it will determine the availability (in accordance with the department's rules and regulations) of minorities and women in the area(s) from which it may reasonably recruit and it will hire for each job classification for which employees are hired in such a way that minorities and women are not under utilized.

3. That, in all solicitations or advertisements for employees placed by it or on its behalf, it will state that all applicants will be afforded equal opportunity without discrimination because of race, color, religion, sex, marital status, national origin or ancestry, age, physical or mental handicap unrelated to ability, or an unfavorable discharge from military service.

4. That it will send to each labor organization or representative of workers with which it has or is bound by a collective bargaining or other agreement or understanding, a notice advising such labor organization or representative of the contractor's obligations under the Illinois Human Rights Act and the Department's Rules and Regulations.

   If any such labor organization or representative fails or refuses to cooperate with the contractor in its efforts to comply with such act and rules and regulations, the contractor will promptly so notify the department and the contracting agency and will recruit employees from other sources when necessary to fulfill its obligations thereunder.

5. That it will submit reports as required by the department's rules and regulations, furnish all relevant information as may from time to time be requested by the department or the contracting agency, and in all respects comply with the Illinois Human Rights Act and the Department's rules and regulations.

6. That it will permit access to all relevant books, records, accounts, and work sites by personnel of the contracting agency and the department for purposes of investigation to ascertain compliance with the Illinois Human Rights Act and the Department's rules and regulations.

7. That it will include verbatim or by reference the provisions of this clause in every subcontract it awards under which any portion of the contract obligations are undertaken or assumed, so that such provisions will be binding upon such subcontractor. In the same manner as with other provisions of this contract, the contractor will be liable for compliance with applicable provisions of this clause by such subcontractors; and further it will promptly notify the contracting agency and the department in the event any subcontractor fails or refuses to comply therewith. In addition, the contractor will not utilize any subcontractor declared by the Illinois Human Rights Commission to be ineligible for contracts or subcontracts with the State of Illinois or any of its political subdivisions or municipal corporations.

SUBCONTRACTS

Each public subcontractor shall in turn include the equal employment opportunity clause set forth within these rules and regulations in each of its subcontracts under which any portion of the contract obligations are undertaken or assumed, said inclusion to be either verbatim or by reference so that the provisions of the clause will be binding upon such subcontractors.

CONTRACTS OR SUBCONTRACTS WITH RELIGIOUS ENTITIES

The requirements of the equal employment clause set forth above with respect to non-discrimination because of religion shall not apply to a religious corporation, association, educational institution or society with respect to the employment of individuals of a particular religion for the carrying on by such corporation, association, educational institution or society of its activities.

V. INSURANCE SPECIFICATIONS

1. The successful Bidder **shall not commence work** under the contract until he/she has obtained all insurance required herein and such insurance has been approved by the Village.

2. The successful Bidder shall maintain limits no less than:

TYPE OF INSURANCE	MINIMUM INSURANCE COVERAGE
COMMERCIAL GENERAL LIABILITY	
1. Comprehensive Form 2. Premises - Operations 3. Explosion & Collapse Hazard 4. Underground Hazard 5. Products/Completed Operations Hazard 6. Contractual Liability Coverage Included 7. Broad Form Property Damage - construction projects only. 8. Independent contractors 9. Personal Injury	COMBINED SINGLE LIMIT PER OCCURRENCE FOR BODILY INJURY AND PROPERTY DAMAGE **$1,000,000** PERSONAL INJURY PER OCCURRENCE **$1,000,000** GENERAL AGGREGATE **$2,000,000**

Business Automobile Liability Any Auto, Owned, Non-Owned Rented/Borrowed	**COMBINED SINGLE LIMIT PER OCCURRENCE FOR BODILY INJURY AND PROPERTY DAMAGE** **$1,000,000**
Worker's Compensation and Occupational Diseases	**STATUTORY LIMIT**
Employer's Liability Insurance per Occurrence	**$500,000**

Coverage shall be at least as broad as (1) Insurance Services Office Commercial General Liability occurrence form CG 0001 with the Village named as additional insured on a form at least as broad as the attached sample endorsement including ISO Additional Insured Endorsement (Exhibit A); (2) if requested, Owners and Contractors Protective Liability policy with the Village named as insured; (3) Insurance Services Office Business Auto Liability form number CA 0001, Symbol 01 "Any Auto"; and (4) Workers Compensation as required by the Labor Code of the State of Illinois and Employers' Liability insurance.

3. In the event of accidents of any kind, the successful Bidder shall furnish the Village with copies of all reports of such accidents at the same time that the reports are forwarded to any other interested parties.

4. Any deductibles or self-insured retentions must be declared to and approved by the Village. At the option of the Village, either: the insurer shall reduce or eliminate such deductibles or self-insured retention as respects the Village, its officials, agents, employees, and volunteers; or the successful Bidder shall procure a bond guaranteeing payment of losses and related investigation, claim administration and defense expenses.

W. **INSURANCE POLICY(S) ENDORSEMENT**
SHALL BE PROVIDED PRIOR TO THE COMMENCEMENT OF WORK.

VILLAGE OF WILLOWBROOK ("The Village")
Attention: **Administration Department**
7760 Quincy Street
Willowbrook, Illinois 60527

1. **POLICY INFORMATION.**

A. Insurance Company TRANSCONTINENTAL INS. Co

B. Policy Number TPE 2079996330

C. Policy Term: (From) 12-1-06 (To) 12-1-07

D. Endorsement Effective Date _____

E. Named Insured SPRING-GREEN LAWN CARE

F. Address of Named Insured 11927 SPAULDING SCHOOL DR
PLAINFIELD, IL 60544

G. Limit of Liability Any One Occurrence/
Aggregate $ 2,000,000

H. Deductible or Self-Insured Retention (Nil unless otherwise specified)
$ 500.00

2. **VERIFICATION OF COVERAGE**

When required on Page 1 of these Specifications, the successful Bidder or Bidders shall, **within thirteen (13) calendar days** after acceptance of the bid by the Village, furnish the Village with certificates of insurance naming the Village, it officials, agents, employees and volunteers as additional insureds, and with original endorsements affecting coverage required. The certificates and endorsements for each insurance policy are to be signed by a person authorized by that insurer to bind coverage on its behalf.

In the event that the successful Bidder(s) fails to furnish the insurance coverage within thirteen (13) calendar days after acceptance of the bid by the Village, then the bid deposit of the successful Bidder shall be retained by the Village as liquidated damages and not as a penalty, it being agreed by the successful Bidder that said sum is a fair estimate of the amount of damages that said Village will sustain due to the successful Bidder's failure to furnish said insurance.

The attached Additional Insured Endorsement (Exhibit A) shall be provided to the insurer for their use in providing coverage to the additional insured. Other additional insured endorsements may be utilized, if they provide a scope of coverage at least as broad as the coverage stated on the attached endorsement (Exhibit A). The Village reserves the right to request full certified copies of the insurance policies and endorsements.

3. **POLICY AMENDMENTS.**

Each policy shall contain, or be endorsed to contain, the following provisions:

A. INSURED.

(COMMERCIAL GENERAL LIABILITY AND BUSINESS AUTOMOBILE LIABILITY) The Village, its officials, agents, employees, and volunteers are to be included as additional insureds with regard to liability and defense of claims arising from: (a) activities performed by or on behalf of the successful Bidder, (b) products and completed operations of the successful Bidder, (c) premises owned, leased or used by the successful Bidder, and (d) automobiles owned, leased, hired or borrowed by the successful Bidder. The coverage shall contain no special limitations on the scope of protection afforded to the Village, its officials, agents, employees, and volunteers.

B. CONTRIBUTION NOT REQUIRED.

(COMMERCIAL GENERAL LIABILITY AND BUSINESS AUTOMOBILE LIABILITY) The insurance afforded by the policy shall be primary insurance as respects the Village, its officials, agents, employees, and volunteers; or stand in an unbroken chain of coverage excess of the

successful Bidder's scheduled underlying primary coverage. In either event, any other insurance or self-insurance maintained by the Village, its officials, agents, employees, and volunteers shall be excess of this insurance and shall not contribute with it.

C. SEVERABILITY OF INTEREST.
(COMMERCIAL GENERAL LIABILITY AND BUSINESS AUTOMOBILE LIABILITY) The insurance afforded by the policy applies separately to each insured who is seeking coverage or against whom a claim is made or a suit is brought, except with respect to the Company's limit of liability. .

D. SUBCONTRACTORS. (ALL COVERAGES)
The successful Bidder shall include all subcontractors as insured under its policies or shall furnish separate certificates and endorsements for each subcontractor. All coverages for subcontractors shall be subject to all of the requirements stated in these General Conditions.

E. PROVISIONS REGARDING THE INSURED'S DUTIES AFTER ACCIDENT OR LOSS. (COMMERCIAL GENERAL LIABILITY AND BUSINESS AUTOMOBILE LIABILITY) Any failure to comply with reporting provisions of the policy shall not affect coverage provided to the Village, its officials, agents, employees, and volunteers.

F. CANCELLATION NOTICE. (ALL COVERAGES)
The insurance afforded by the policy shall not be suspended, voided, canceled, reduced in coverage or in limits except after thirty (30) days' prior written notice by certified mail return receipt requested has been given to the Village. Such notice shall be addressed as shown in the heading of the endorsement.

G. SUBROGATION (WORKERS COMPENSATION AND EMPLOYERS' LIABILITY)
The insurer shall agree to waive all rights of subrogation against the Village, its officials, agents, employees, and volunteers for losses arising from work performed by the successful Bidder for the Village.

H. ACCEPTABILITY OF INSURERS.(ALL COVERAGES)
Insurance is to be placed with insurers with a Best's rating of no less than A-,VII and licensed to do business in the State of Illinois.

I. ASSUMPTION OF LIABILITY. (ALL COVERAGES)
The successful Bidder assumes liability for all injury to or death of any person or persons including employees of the successful Bidder, any subcontractor, any supplier or any other person and assumes liability for all damage to property sustained by any person or persons occasioned by or in anyway arising out of any work performed pursuant to the contract.

4. **SIGNATURE OF INSURER OR AUTHORIZED REPRESENTATIVE OF THE INSURER.**

I, _____ (print/type name), warrant, and by my signature hereon do so certify, that the required coverage is in place.

Signature of: _____

Authorized Representative (Original signature required on endorsement furnished to the Village).

Title: _____

Organization: _____

Address: _____

Phone: _____ Fax: _____

X. **INDEMNITY HOLD HARMLESS PROVISION**

To the fullest extent permitted by law, the successful Bidder hereby agrees to defend, indemnify and hold harmless the Village, its officials, agents, employees, and volunteers, against all injuries, deaths, loss, damages, claims, patent claims, suits, liabilities, judgments, costs and expenses, which may in anywise accrue against the Village, its officials, agents, employees, and volunteers; arising in whole or in part or in consequence of the performance of the work by the successful Bidder, its employees, or subcontractors, or which may in anywise result therefore, except that arising out of the sole legal cause of the Village, its officials, agents, employees, and volunteers, and the successful Bidder shall, at its own expense, appear, defend and pay all charges of attorneys and all costs and other expenses arising therefore or incurred in connection therewith, and, if any judgment shall be rendered against the Village, its officials, agents, employees, and volunteers, in any such action, the successful Bidder shall, at its own expense, satisfy and discharge same.

The successful Bidder expressly understands and agrees that any performance bond or insurance policies required by the contract, or otherwise provided by the successful Bidder, shall in no way limit the responsibility to indemnify, keep and save harmless and defend the Village, its officials, agents, employees, and volunteers, as herein provided.

The successful Bidder further agrees that to the extent that money is due the successful Bidder by virtue of the contract, an amount of said money as shall be considered necessary in the judgment of the Village, may be retained by the Village to protect itself against said loss until such claims, suits, or judgments shall have been settled or discharged and/or evidence to that effect shall have been furnished to the satisfaction of the Village.

ADDITIONAL INSURED ENDORSEMENT - EXHIBIT A

Name of Insurer: _____

Name of Insured: _____

Policy Number: _____

Policy Period: _____

Endorsement Effective Date: _____

This endorsement modifies coverage provided under the following:

Commercial General Liability Coverage Part

Name of Individuals or Organization:

_____

_____

WHO IS AN INSURED section of the policy / coverage document is amended to include as an insured, the individuals or organization shown above, but only with respect to liability "arising out of your work".

For purposes of this endorsement, "arising out of your work" shall mean:

1. Liability the Additional Insured may incur resulting from the actions of a contractor it hires.
2. Liability the Additional Insured may incur for negligence in the supervision of the Named Insured Contractors work.
3. Liability the Additional Insured may incur for failure to maintain safe worksite conditions.
4. Liability the Additional Insured may incur due to joint negligence of the Named Insured Contractor and the Additional Insured.

(EXHIBIT A) IRMA - Section 4:06, Page 13

CONTRACTOR'S CERTIFICATION - BID PROPOSAL

SPRING-GREEN LAWN CARE, as part of its bid on a
(Name of Contractor)

contract for LANDSCAPE FERTILIZATION to The Village of Willowbrook, Illinois, hereby certifies that said contractor is not barred from bidding on the aforementioned contract as a result of a violation of either 720 ILCS 5/33E-3 or 5/33E-4.

By: Armand D'Agostino
Authorized Agent of Contractor

SUBSCRIBED AND SWORN BEFORE ME

This 23rd day of

February, 20 07.

MY COMMISSION EXPIRES:

9-2-10

Suzanne M Yunker
NOTARY PUBLIC

OFFICIAL SEAL
SUZANNE M YUNKER
NOTARY PUBLIC - STATE OF ILLINOIS
MY COMMISSION EXPIRES:09/02/10

CONTRACT – *Page One of Two*

1. This agreement, made and entered into this _____ day of _____ 20____, between the Village of Willowbrook, acting by and through its Mayor and Board of Trustees and _____

2. That for and in consideration of the payments and agreements mentioned in the Specifications and Contract Document attached hereto,_____ agrees with the Village of Willowbrook at his/her own proper cost and expense to furnish the equipment, material, labor, supplies and/or services as provided therein in full compliance with all of the terms of such specifications and contract documents attached hereto.

3. It is understood and agreed that the specifications and contract documents hereto attached, prepared by the Village of Willowbrook, are all essential documents of this contract and are a part hereof.

4. In witness whereof, the said parties have executed these presents on the date above mentioned.

(Village Seal) **VILLAGE OF WILLOWBROOK**

Attest:

By: Leroy R. Hansen
Village Clerk

By: _____
Village Administrator

IF A CORPORATION

(Corporate Seal) **CORPORATE NAME**

Attest: _____

By: _____
Secretary

By: _____
President

SUBSCRIBED AND SWORN BEFORE ME

This _____ day of _____, 20_____.

MY COMMISSION EXPIRES: _____

_____
NOTARY PUBLIC

CONTRACT - ***Page Two of Two***

IF A PARTNERSHIP

(Seal) _____

(Seal) _____

(Seal) _____

(Seal) _____

PARTNERS DOING BUSINESS UNDER THE NAME OF

_____

SUBSCRIBED AND SWORN BEFORE ME

This _____ day of _____, 20_____.

MY COMMISSION EXPIRES: _____

_____
NOTARY PUBLIC

IF AN INDIVIDUAL

(Seal)

SUBSCRIBED AND SWORN BEFORE ME

This _____ day of _____, 20_____.

MY COMMISSION EXPIRES: _____

_____
NOTARY PUBLIC

II. ADDITIONAL REQUIREMENTS FOR PUBLIC WORKS PROJECTS

A. INTENT

It is the intent of these specifications and contract that a complete working improvement be constructed. All necessary work and materials shall be included; whether specifically called for or implied.

B. LOCATION OF UTILITIES

The successful Bidder shall contact the Village of Willowbrook Department of Municpal Services at least seventy-two (72) hours before beginning work. Where required, electric, gas, telephone and cable utilities must be located in the field prior to construction. The Village bears no responsibility for damage done to existing utilities during construction.

C. TRAFFIC CONTROL AND PROTECTION

Traffic control and protection - the successful Bidder's manner of prosecuting the work or revisions in the phasing of operations may require temporary traffic control devices to be installed. In such cases, all but not limited to, signs, signals, markings, traffic codes, barricades, warning lights, flagmen and other traffic control devices must conform with all provisions of the appropriate standards. The Village shall be the sole judge as to the acceptability of placement and maintenance of the traffic control devices prescribed in the appropriate standards. Said temporary traffic control devices shall be considered incidental to the contract and no compensation will be allowed.

D. EXAMINATION OF SITE

The successful Bidder shall carefully examine the site and become familiar with the conditions under which he/she will have to execute the work required under this contract. Failure to do so will in no way relieve the successful Bidder of his/her responsibility under this contract.

E. ADDITIONAL WORK

The Village reserves the right to order additional work during the course of construction. Prior to commencing any additional work, the successful Bidder shall submit his/her charges for performing the work and shall not proceed until the Village has approved the charges.

F. PREVAILING WAGES

In accordance with the law and the provisions of 820ILCS 130/0.01 et seq., entitled "an Act regulating wages of laborers, mechanics, and other workers employed in any public works by the state, county, city or any public body or any political subdivision or by any one under contract for public works", not less than the prevailing rate of wages shall be paid to all laborers, workmen and mechanics performing work under this contract. Prospective Bidders shall thoroughly familiarize themselves with the provisions of the above mentioned act and shall prepare any and all bids in strict compliance therewith. Copies of the prevailing rate of wages for this Village are on file in the office of the Village Clerk of the Village of Willowbrook.

G. **PROTECTION OF EXISTING FACILITIES**

Existing facilities, including grounds, structures, landscaping, and so forth, shall be protected by the successful Bidder. Any damage to existing facilities shall be reported to the Village and shall be repaired promptly by the successful Bidder when ordered to do so by the Village. All repairs of damage to existing facilities shall be made to the satisfaction of the Village. Failure to repair damage shall be just cause for withholding payment for work that becomes due.

H. **BIDDER'S RESPONSIBILITY**

The successful Bidder shall be responsible for constructing the improvements in accordance with the specifications. The successful Bidder shall have available on the job site at all times during construction, a complete set of specifications with all revisions thereto. The successful Bidder shall employ only workmen skilled in their trade and shall furnish full-time supervision of all construction. An English-speaking superintendent shall be at the site whenever construction is in progress. The superintendent shall have authority to receive and carry out instructions from the Village. The lack of a competent superintendent on the site during construction shall be just cause for the Village to order the work to cease.

I. **SITE CONDITION AND CLEAN-UP**

The successful Bidder shall store materials and equipment where directed by the Village and shall move same, if and when it becomes necessary at his/her own expense.

The successful Bidder shall have control over his/her employees' parking of automobiles on the site, and shall provide portable toilet facilities and receptacles for depositing waste paper and garbage. The successful Bidder shall keep the site neat and shall clean up any debris when directed to do so by the Village. Upon completion of the improvement, the site shall be left in a condition acceptable to the Village. Failure to keep the site neat, or clean-up debris when directed to do so shall be just cause for withholding payment due the successful Bidder and final acceptance will not be made until the site is in a condition acceptable to the Village.

J. **TRESPASS ON LAND**

The successful Bidder shall confine his/her operations and storage of materials and equipment to the job site, public right-of-way or easements. The successful Bidder shall exercise extreme caution so as not to trespass upon property of third parties not involved in the contract. In the event that the successful Bidder is to enter upon the property of third parties in the execution of the work, he/she shall obtain written permission prior to doing so, and submit evidence of said written permission to the Village.

K. **COPIES OF DRAWINGS AND SPECIFICATIONS**

The Village shall furnish to the Bidder, without charge, three (3) sets of specifications for that portion of the work to be performed by the Bidder. If the Bidder desires additional copies of the specifications, they may be secured from the Village at Bidder's expense.

L. **PROTECTION OF PUBLIC**

The Bidder shall erect and maintain sufficient signs, barricades, lights and fences and shall employ competent flagmen and watchmen to warn and guard the public against the hazards created by the construction of the work. The Bidder shall not allow hazardous conditions to remain without affording adequate protection to the public. If, in the

opinion of the Village, a hazardous condition exists and the Bidder fails to correct the condition, or to protect the public, the Village may order the necessary precautions to safeguard the public, the cost of which will be deducted from payments due the Bidder. Flagrant disregard for the safety of the public shall constitute just reason for the Village to order cessation of work.

M. GUARANTEE

All work and materials furnished under this contract shall be guaranteed by the Bidder against defects, failure, improper performance and non-compliance with the contract documents for a period of one (1) year after completion and acceptance of the work under this contract. During the guarantee period, the Bidder shall repair and replace, at his/her own expense, when so ordered by the Village, all work that develops defects whether these defects may be inherent in the functioning of the piece of operating equipment, materials furnished or workmanship performed. Any equipment or material that is repaired or replaced shall have the guarantee period extended one (1) year from the date of the last repair or replacement.

N. PAYMENT

Final payment will be made when the work is accepted by the Village. The Bidder shall submit final waivers-of-lien covering all labor, material, equipment, services and so forth, prior to receiving final payments.

O. ACCEPTANCE

The work shall not be accepted by the Village until the Village has determined that all work is complete and in accordance with the specifications.

THIS PAGE INTENTIONALLY LEFT BLANK

III. TERMS AND CONDITIONS OF THE SPECIFIC PROJECT

A. EXAMINATION OF SITE

Bidders shall inform themselves of all the conditions under which the work is to be performed concerning the site of the work, the obstacles that may be encountered, and all other relevant matters concerning the work to be performed under this contract.

The Contractor to whom a contract is awarded will not be allowed any extra compensation by reason of any such matters of things concerning which the Contractor did not inform himself prior to bidding. The successful Contractor must employ, so far as reasonably possible as determined by the Village, such methods and means in the carrying out of his work as will not cause any interruption or interference with any other contractor.

B. MEETING BEFORE WORK BEGINS

It is mandatory that the Contractor meets with the Superintendent of Parks & Recreation and the Director of Municipal Services or their designee(s) prior to the start of work in order to review the contract specifications designate the appropriate project contacts, and the manner in which work will be proceeding, among other items.

C. DAMAGE TO PUBLIC OR PRIVATE PROPERTY

Any damage of public or private property caused by the Contractor's operations shall be resolved with the property owner within ten (10) days after damage occurs to the satisfaction of the Village. The Contractor shall inform the Village of any damage caused by the Contractor's operation on the day such damage occurs. Should the damage not be rectified within the time frame agreed upon or to the satisfaction of the Village, the Village reserves the right to repair or replace that which was damaged or assess the Contractor such cost as may be reasonable and related to damaged caused by the Contractor, and deduct these costs from any payment due the Contractor.

D. PREVAILING WAGES

In accordance with the law and the provisions of 820ILCS 130/0.01 et seq.,entitled "an Act regulating wages of laborers, mechanics, and other workers employed in any public works by the state, county, city or any public body or any political subdivision or by any one under contract for public works", not less than the prevailing rate of wages shall be paid to all laborers, workmen and mechanics performing work under this contract. Prospective Bidders shall thoroughly familiarize themselves with the provisions of the above-mentioned act and shall prepare any and all bids in strict compliance therewith. Copies of the prevailing rate of wages for this Village are on file in the office of the Village Clerk of the Village of Willowbrook

E. SUBLETTING CONTRACT

It is mutually understood and agreed that the Contractor shall not assign, transfer, convey, sublet, or otherwise dispose of this contract or his right, title, or interest therein, or his power to execute such contract, to any other person, firm, or corporation, without the previous written consent of an authorized representative of the Village of Willowbrook; but in no case shall consent relieve the Contractor from his obligations or change the terms of the contract.

F. DEFAULT

The contract may be canceled or annulled by the Village in whole or in part by written notice of default to the Contractor upon nonperformance or violation of contract terms. Failure of the Contractor to deliver services within the time stipulated, unless extended in writing by the Village of Willowbrook, shall constitute contract default.

G. SAFETY

The Contractor shall insure that all its employees or agents shall abide by all safety rules or regulations set by the Village of Willowbrook as well as by general regulations and standards of the industry and in accordance with all applicable federal, state, and local regulations.

H. WORKMANSHIP

Workmanship shall be of the highest caliber in every respect. Workers must take care to insure the least amount of disturbance to the sites, Village staff members, and the general public.

I. PENALTY FOR NON-COMPLETION

Time is of the essence to the contract. Should the Contractor fail to complete the work within the timelines stipulated in the contract or within such extended time as may have been allowed, the Contractor shall be liable and shall pay the Village two hundred fifty dollars ($250.00) per calendar day not as a penalty but as liquidated damages, for each day of overrun in the contract time or such extended time as may have been allowed. The liquidated damages for failure to complete the contract on time are approximate, due to the impracticality of calculating and proving actual delay costs. This penalty established is to cover the cost of delay to account for administration, engineering, inspection, and supervision during periods of extended and delayed performance. The costs of delay represented by this schedule are understood to be a fair and reasonable estimate borne by the Village during extended and delayed performance by the Contractor of the work, remaining incidental work, correction of work improperly completed, or repair of work damaged as a result of the Contractor. The liquidated damage amount specified will accrue and be assessed until final completion of the total physical work of the contract even though the work may be substantially complete. The Village will deduct these liquidated damages from any monies due or to become due to the Contractor from the Village.

The other provisions of the Contract have been established to allow for the efficient completion of this project, without creating additional burden or hardship on the Village or additional administration and/or operating expenses for the Village. The failure to adhere to the specifications of the contract, including but not limited to the following examples, shall result in the assessment of liquidated damages of one hundred dollars ($100.00) per incident per day. Some examples include:

- failing to complete work in a manner or sequence as required;
- damaging landscaping (i.e. debarking plants by running into them with equipment);
- failure of the contractor to be accessible to the Village or respond to requests to complete work;

J. **SUPERVISION AND TRAINING**

Competent English speaking supervisory personnel shall be present at each facility on a regular basis. The Contractor shall properly schedule and train all of its personnel. It is required that the supervisor visit the facilities being cleaned on a weekly basis to be sure that it has been completed in a satisfactory manner. The Village reserves the right to have the contractor assign a new contact, supervisor, and/or staff, for the Village's account if the current representative(s) are deemed unacceptable.

K. **WORKING HOURS**

The Contractor shall work the same hours as the Municipal Services Department unless other arrangements are agreed upon ahead of time. The Contractor must inform the Director of Municipal Services, or his designee, when the Contractor will be working outside of the normal working hours for Municipal Services.

L. **TRESPASS ON LAND**

The Contractor shall confine his operations and storage of materials and equipment to the job site public right-of-way or easements. The Contractor shall exercise extreme caution so as not to trespass upon property of third parties not involved in the contract. In the event that the Contractor is to enter upon the property of third parties in the execution of the work he shall obtain written permission prior to doing so and submit evidence of said written permission to the Village.

M. **COSTS**

The undersigned hereby affirms and states that the prices quoted herein constitute the total cost to the Village for all work involved in the respective items. This cost also includes all proposal preparation costs, insurance, royalties, transportation charges, use of all tools and equipment, superintendent, overhead expense, inspection costs, all profits and all other work services and conditions necessarily involved in the work to be done in accordance with the requirements of the contract documents considered severally and collectively.

N. **TRAFFIC CONTROL**

The Contractor shall provide adequate traffic control for work area protection in compliance with the Federal Highway Administration Manual on Uniform Traffic Control Devices for Streets and Highways, the State of Illinois Vehicle Code, the Illinois Department of Transportation Highway Standards, and the Illinois Department of Transportation Handbook of Traffic Engineering Practice for Small Cities.

O. **PROTECTION OF EXISTING FACILITIES**

Existing facilities, including grounds, structures, landscaping and so forth shall be protected by the vendor. Any damage to existing facilities shall be reported to the Village and shall be repaired promptly by the vendor when ordered to do so by the Village at no cost to the Village. All repairs of damage to existing facilities shall be made to the satisfaction of the Village. Failure to repair damage shall be just cause for withholding payment for work, which becomes due.

P. **ACCESSIBILITY OF CONTRACTOR**

Contractor shall supply cell phone numbers, daytime office numbers, fax numbers, and pager numbers of supervisors handling this contract. The Contractor shall return all calls

or pages within one hour of the Village placing the call. On-site response time for complaints must be made within 24 hours of the initial call being made by the Village. The Contractor must assign an English-speaking crew leader to monitor all work being performed within the Village. The Contractor shall update the Director of Municipal Services or his designee on work progress no less than once per week. Failure to comply with the accessibility requirements shall be deemed as substandard work and will be subject to the same penalties.

Q. REFERENCES

A reference list (attached) must also be submitted with the bid documents. The references must be municipal accounts or accounts similar in size, but shall include at least one (1) municipal client at a minimum.

R. BILLING & PAYMENT

Payment shall be made in seven (7) equal payments, once all work has been completed in a satisfactory manner and the specifications stated herein have been met, for the following months: May, June, July, August, September, October and April following receipt of an invoice from the Contractor for the month in question.

S. RENEWAL AND EXTENSION

This Contract shall be in full force and effect from May 1, 2007 to and including April 30, 2008. At the sole discretion of the Village, this contract may be extended for not more than one (1) additional twelve (12) month period under the same terms and conditions.

T. EQUIPMENT CONDITION

All equipment will be kept in good, safe operating condition. All equipment will be kept in such a condition so that the gas/oil is not leaking.

U. ADDITIONS OR DELETIONS

The Village reserves to right to increase or decrease quantities and number of fertilization application based on actual field conditions and requirements. The Contractor will be asked to provide a list of hourly manpower and equipment rates used to calculate the proposal prices for this section of the contract. These rates shall be used when the quantities of work must be increased or decreased for any reason such as adding sites, deleting sites, or failure of the Contractor to complete required work. Using these rates, the Village and the Contractor shall meet and shall mutually agree upon the dollar amounts to be added to or deleted from the contract

V. REPORT OF WORK PERFORMED AND SCHEDULED

The Contractor shall, at a minimum of once per month during the period of providing services, submit a written report to the Director of Municipal Services in detailing the work that has been performed by the Contractor during the previous month.

W. SCOPE OF THE WORK

1. Village Parks

Work under this section shall include all scheduled fertilizing, broad leaf weed control and crabgrass weed control. All grass areas of the sites specified in this section shall be treated. Estimated acreage areas included in this section are as follows:

PARK	ACRES
Borse Memorial Community Park#	8.8
Midway Park	2.1
Creekside Park	5.1
Lake Hinsdale Park	1.0
Ridgemoor Park	5.4
Waterford Park	4.3
Farmingdale Terrace Park	3.0
Willow Pond	3.0
Prairie Trail Park	5.0
Roger's Glen Park *	1.5

* includes both parkways on Roger's Farm Rd.

#- It should be noted that this area in the Community Park is equipped with an underground sprinkler system and that care must be used to prevent damage to that system. Total acreage for this section = 39.2

2. **Roadside Rights of Way, Medians, and Specified Facilities**

All grass areas of the sites specified in this section shall be treated. Work under this section shall include all scheduled fertilizing, broad leaf weed control and crabgrass weed control. Estimated acreage areas included in this section are as follows:

A. Median areas and road side rights of ways on Route 83 from approximately the 5900 block of Route 83 to Route 83 south 79th St., including the bermed area at Midway Drive, (south of Midway Drive), will be mowed to a 2 ½"to 3" height. 24.67 acres.

B. 73rd Ct. Pump house site 3.37 acres

C. Village Hall .30 acres

Total acreage for this section = 28.34

Fertilization & Weed Control

All applications of pesticide and fertilizer shall be scheduled with the Director of Municipal Services or his designee at least one week prior to spraying. The Village may at its discretion appoint an inspector to oversee the application. All products shall be liquid form except for planting beds, which will be applied in a granular form. All applications shall be applied in accordance with labels and manufacturers' recommendations and must be approved by the Village prior to application and scheduling. All Material Safety Data Sheets (MSDS) for the various chemicals being used within the Village must be supplied to the Village prior to their use. All employees of the Contractor who will be working with any chemicals (pesticides, fertilizers, etc.) must have all required certifications for such work and shall comply with all applicable federal, state, and local regulations.

The Contractor shall be responsible for the replacement of plant material killed off due to chemical application. Round up shall be used with extreme caution around planting beds and trees and applied only with applicator sticks.

The following application schedule and product list shall be followed:

Village Parks, Roadside Rights of Way, Medians, and Specified Facilities

APPLICATION #1 -MARCH-APRIL

Fertilization application with Crabgrass
Pre-emergent 19-3-7, Plus 0.86 Pre-M

APPLICATION #2 – MAY

Fertilization application with Crabgrass Booster
Pre-emergent, Broadleaf Weed Control
Formolene 30-0-0, Urea 45-0-0, Potassium
Chloride 0-0-62, Broadleaf Weed Control
Trimec 899, Pre-M 6WP

APPLICATION #3 – JUNE

Fertilization application with Broadleaf Weed Control
And Grub Control, Formolene 30-0-0,
Urea 45-0-0, Potassium Chloride 0-0-62,
Broadleaf Weed Control Trimec 899,
Merit 75 WSP

APPLICATION #4 – JULY - AUGUST

Fertilization application with Broadleaf Weed Control
Formolene 30-0-0, Potassium Chloride 0-0-62,
Broadleaf Weed Control Trimec 899

APPLICATION #5 – SEPTEMBER - AUGUST

Fertilization application with Broadleaf Weed Control
Follow up with Grub Control as needed. 14-3-6 with 1% iron
Trimec 899, Dylox 80 Insecticide

APPLICATION #6 – NOVEMBER - DECEMBER

Dormant Fertilization application Urea 45-0-0

Village of Willowbrook

LANDSCAPE SERVICES SPECIFICATIONS BID FORM – PAGE 1 OF 2

Bidder, in submitting this proposal, hereby agrees to comply with all provisions and requirements of the specifications and contract documents attached hereto for the prices as specified below. This proposal shall remain in force and full effect for a twelve (12) month period, from May 1, 2007 through April 30, 2008.

FERTILIZATION FOR VILLAGE PARKS (Section III-W-1)	**COST**
APPLICATION #1 –MARCH-APRIL Fertilization application with Crabgrass Pre-emergent 19-3-7, Plus 0.86 Pre-M	$ 2310.
APPLICATION #2 – MAY Fertilization application with Crabgrass Booster Pre-emergent, Broadleaf Weed Control Formolene 30-0-0, Urea 45-0-0, Potassium Chloride 0-0-62, Broadleaf Weed Control Trimec 899, Pre-M 6WP	$ 2373.
APPLICATION #3 – JUNE Fertilization application with Broadleaf Weed Control Grub Control, Formolene 30-0-0, Urea 45-0-0, Potassium Chloride 0-0-62, Broadleaf Weed Control Trimec 899, Merit 75 WSP	$ 2730.
APPLICATION #4 – JULY – AUGUST Fertilization application with Broadleaf Weed Control Formolene 30-0-0, Potassium Chloride 0-0-62, Broadleaf Weed Control Trimec 899	$ 1890.
APPLICATION #5 – SEPTEMBER – AUGUST Fertilization application with Broadleaf Weed Control Grub Control as needed. 14-3-6 with 1% iron Trimec 899, Dylox 80 Insecticide	$ 2730.
APPLICATION #6 – NOVEMBER – DECEMBER Dormant Fertilization application Urea 45-0-0	$ 557.
TOTAL COST FOR VILLAGE PARKS	$ 12,590.00

FERTILIZATION FOR ROADSIDE RIGHTS OF WAY, MEDIANS, AND SPECIFIED FACILITIES **COST**
(Section III-W-2)

APPLICATION #1 -MARCH-APRIL $ 1764.
Fertilization application with Crabgrass
Pre-emergent 19-3-7, Plus 0.86 Pre-M

APPLICATION #2 – MAY $ 1680.
Fertilization application with Crabgrass Booster
Pre-emergent, Broadleaf Weed Control
Formolene 30-0-0, Urea 45-0-0, Potassium
Chloride 0-0-62, Broadleaf Weed Control
Trimec 899, Pre-M 6WP

APPLICATION #3 – JUNE $ 2205.
Fertilization application with Broadleaf Weed Control
Grub Control, Formolene 30-0-0,
Urea 45-0-0, Potassium Chloride 0-0-62,
Broadleaf Weed Control Trimec 899,Merit 75 WSP

APPLICATION #4 – JULY - AUGUST $ 1155.
Fertilization application with Broadleaf Weed Control
Formolene 30-0-0, Potassium Chloride 0-0-62,
Broadleaf Weed Control Trimec 899

APPLICATION #5 – SEPTEMBER - AUGUST $ 1680.
Fertilization application with Broadleaf Weed Control
Grub Control as needed. 14-3-6 with 1% iron
Trimec 899, Dylox 80 Insecticide

APPLICATION #6 – NOVEMBER - DECEMBER $ 420.
Dormant Fertilization application Urea 45-0-0

TOTAL COST FOR ROADSIDE RIGHTS OF WAY, MEDIANS, AND SPECIFIED FACILITIES $ 8904.00

GRAND TOTAL - VILLAGE PARKS, ROADSIDE RIGHTS OF WAY, MEDIANS, AND SPECIFIED FACILITIES $ 21,494.00

Village of Willowbrook

LANDSCAPE SERVICES SPECIFICATIONS BID FORM – PAGE 2 OF 2

Rates for services listed for 2007-08 contract period will not increase more than 5 % for the 2008-09 contract period. At its sole discretion, the Village of Willowbrook may extend the contract for a one-year term beginning on May 1, 2008 and concluding April 30, 2009.

Also as noted in the Additions or Deletions section, the Contractor shall provide a list of hourly manpower and equipment rates used to calculate the proposal prices for this section of the contract. Attach list marked as "Contractor's Exhibit" and write "attached" in the following blank: ATTACHED

Company : SPRING-GREEN LAWN CARE

Address: 11927 SPAULDING SCHOOL DR
PLAINFIELD, IL 60544

Telephone No. 800-830-5914 Fax No. 815-436-8855

Signature: Armand D'Agostino

Name and Title: *(Please Print)* ARMAND D'AGOSTINO - COMMERCIAL SALES

Date: 2-23-07

Subscribed and sworn before me this 23rd day of February, 2007

MY COMMISSION EXPIRES: 9-2-10

OFFICIAL SEAL
SUZANNE M YUNKER
NOTARY PUBLIC - STATE OF ILLINOIS
MY COMMISSION EXPIRES:09/02/10

Suzanne M. Yunker
NOTARY PUBLIC

Spring-Green Commercial Division

References

- **College of DuPage** – Glen Ellyn (Valerie Mechelle 630-942-2574)
- **Downers Grove Park District** – Downers Grove (Len Fisher 630-963-1304)
- **Village of Lisle** – Lisle (Patti Huth 630-271-4134)
- **Triton College** – River Grove (Tony Torres 708-456-0300)
- **Midwestern University** – Oak Brook (Kevin McCormick 630-515-6053)
- **Buffalo Grove Park District** – Buffalo Grove (Steve Houde 847-459-2311)
- **Village of Barrington** – Barrington (Mike Syzmanski 847-381-7903)
- **Hinsdale Central High School** – (Jim Lewendowski)
- **Hinsdale South High School** – (Dean Balduff)
- **Village of Willowbrook** – (Tim Halik 630-323-8215)

CONTRACTOR'S EXHIBIT – ADDITIONS OR DELETIONS

LABOR RATES

Employee Title/Classification	Hourly Rate
LAWN SERVICE PROFESSIONAL	COMMISSION

EQUIPMENT RATES

Make/Model	Hourly Rate
DNA	

SPRING-GREEN.
America's Neighborhood Lawn Care Team.

Spring-Green Lawn & Tree Care
11927 Spaulding School Drive, Plainfield, IL 60585
Phone 815-436-8350 800-830-5914
Fax 815-436-8855
www.spring-green.com

EXHIBIT "B"

February 28, 2008

Mr. Tim Halik
Village of Willowbrook
7760 Quincy Street
Willowbrook, IL 60527

Dear Tim:

Thank you for giving me the opportunity to perform the Village of Willowbrook turf program for the 2008 season. I have enjoyed working with you in the past and look forward to continuing our association.

This letter is to confirm that Spring Green Lawn & Tree Care agrees to extend its service contract for Fertilization services for the Village of Willowbrook at 5% above the 2007 bid price. Total cost for the service year beginning May 1, 2008 and ending on April 30, 2009 will be $22,568.70.

Sincerely

Armand D'Agostino

Armand D'Agostino
Commercial Sales Manager

RECEIVED
MAR - 3 2008
VILLAGE OF WILLOWBROOK
MUNICIPAL SERVICES DEPT.

EXHIBIT "B"

Timothy Halik

From: Armand D'Agostino [Armand@spring-green.com]
Sent: Tuesday, March 10, 2009 11:26 AM
To: Timothy Halik
Subject: Spring-Green Lawn Care
Attachments: image001.jpg

Dear Tim,

Please accept this e-mail confirming that Spring-Green Lawn Care agrees to extend its service contract for fertilization services for the Village of Willowbrook at the same cost as the 2008 contract.

Sincerely,

Armand D'Agostino

Armand D'Agostino
Commercial Sales Manager
Spring-Green Lawn Care
800-830-5914
815-436-8855 fax
815-375-9441 cell
armand@spring-green.com
www.spring-green.com

SPRING-GREEN
Your Neighborhood Lawn Care Professional.

RECEIVED
MAR 10 2009
VILLAGE OF WILLOWBROOK
BUILDING & ZONING DIVISION

EXHIBIT "B"

Timothy Halik

From: Armand D'Agostino [Armand@spring-green.com]
Sent: Thursday, February 25, 2010 3:13 PM
To: Timothy Halik
Subject: Spring-Green Lawn Care
Attachments: image001.jpg

Dear Tim,

Please accept this e-mail confirming that Spring-Green Lawn Care agrees to extend its service contract for fertilization services for the Village of Willowbrook at the same cost as the 2009 contract.

Sincerely,

Armand D'Agostino

Armand D'Agostino
Commercial Sales Manager
Spring-Green Lawn Care
800-830-5914
815-436-8855 fax
815-546-9425 cell
armand@spring-green.com
www.spring-green.com

SPRING-GREEN.
Your Neighborhood Lawn Care Professional.

VILLAGE OF WILLOWBROOK

BOARD MEETING
AGENDA ITEM - HISTORY/COMMENTARY

ITEM TITLE:

A RESOLUTION WAIVING THE COMPETITIVE BIDDING PROCESS AND AUTHORIZING THE VILLAGE PRESIDENT AND VILLAGE CLERK TO EXECUTE A CERTAIN AGREEMENT – JANITORIAL SERVICES – BETWEEN THE VILLAGE OF WILLOWBROOK AND BEST QUALITY CLEANING, INC.

AGENDA NO. 7R.

AGENDA DATE: 04/12/10

STAFF REVIEW: Tim Halik, Director of Municipal Services **SIGNATURE:** T. Halik

LEGAL REVIEW: William Hennessy **SIGNATURE:** W Hennessy

RECOMMENDED BY VILLAGE ADMIN.: **SIGNATURE:** Megan E. Price

REVIEWED & APPROVED BY COMMITTEE: **YES** ☒ on 3/08/10 **NO** ☐ **N/A** ☐

ITEM HISTORY (PREVIOUS VILLAGE BOARD REVIEWS, ACTIONS RELATED TO THIS ITEM, PERTINENT HISTORY)

For the last three (3) years, Village Hall janitorial cleaning services have been provided by Best Quality Cleaning (BQC), Inc., Franklin Park, IL. The end of the term of the current contract is April 30, 2010. Staff is pleased with the quality of services currently provided by BQC. Therefore, BQC was asked whether they would consider a contract extension for a subsequent year with no price increase. BQC indicated that in order to keep the contract with the Village they would agree to a one-year contract extension and would not seek a rate increase. Therefore, the rates we would pay for the 10/11 season would be the same as the 09/10 season.

The Municipal Services Committee has discussed this item at their regular meeting on March 8, 2010 and recommends that the Village Board approve a one-year contract extension with Best Quality Cleaning at the same price as offered in 2009.

ITEM COMMENTARY (BACKGROUND, DISCUSSION, RECOMMENDATIONS, ETC.)

The public bid process for this particular contract tends to be very time consuming for staff. After the bid document is finalized, numerous copies are mailed to available janitorial vendors and a notice of the public bid is printed in both local newspapers. Given the numerous questions that are typically received from bidders, a mandatory pre-bid meeting with all vendors is held to survey the Village Hall building and answer all questions. Once the sealed bids are opened, the process to begin to re-train a potential new company begins. From past experience, staff estimates that it takes approximately 6 months time to properly train and monitors a new janitorial vendor to ensure the cleaning work is completed as intended and required. Given the ability to forego this lengthy bidding process and use of staff time, coupled with no price increase from the previous contract price, this contract renewal offer will save Village resources. As such, staff would recommend that we waive the competitive bidding process and award a one-year contract directly to BQC, Inc. for the coming year.

ACTION PROPOSED:

Adopt the resolution.

RESOLUTION NO. 10-R-16

A RESOLUTION WAIVING THE COMPETITIVE BIDDING PROCESS AND AUTHORIZING THE VILLAGE PRESIDENT AND VILLAGE CLERK TO EXECUTE A CERTAIN AGREEMENT – JANITORIAL SERVICES – BETWEEN THE VILLAGE OF WILLOWBROOK AND BEST QUALITY CLEANING, INC.

WHEREAS, in the opinion of at least two-thirds (2/3) of the Trustees then holding office, it is in the best interests of the Village to waive the competitive bidding process and to authorize the President and Village Clerk to execute an Agreement with Best Quality Cleaning, Inc., for the purposes of providing janitorial services to the Village of Willowbrook.

NOW, THEREFORE, BE IT RESOLVED by the President and Board of Trustees of the Village of Willowbrook, DuPage County, Illinois, as follows;

SECTION ONE: That the competitive bidding process be waived and that the President and Village Clerk be and the same are hereby authorized to execute an Agreement with Best Quality Cleaning, Inc., in substantially the same form attached hereto as Exhibit "A" and made a part hereof, for the purposes of Best Quality Cleaning, Inc. providing janitorial services to the Village of Willowbrook.

SECTION TWO: That all resolutions or parts thereof, in conflict with the provisions of this Resolution are, to the extent of such conflict, expressly repealed.

SECTION THREE: That this Resolution shall be in full force and effect from and after its adoption, approval and publication in pamphlet form as provided by law.

ADOPTED and APPROVED this 12th day of April, 2010.

APPROVED:

_____
Village President

ATTEST:

_____
Village Clerk

ROLL CALL VOTE: AYES:_____

NAYS:_____

ABSTENTIONS:_____

ABSENT:_____

AGREEMENT

THIS AGREEMENT made and entered into this 12th day of April, 2010, by and between the Village of Willowbrook, a municipal corporation of the State of Illinois, and Best Quality Cleaning, Inc.

WITNESSETH:

WHEREAS, the Constitution of the State of Illinois, 1970, Article VII, Section 10, provides in part that units of local government, including municipalities, may contract with individuals in any manner not prohibited by law or by ordinance.

WHEREAS, by Resolution 09-R-13, the Village President and Village Clerk were authorized to execute, and did execute, a certain contract with Best Quality Cleaning, Inc. for the purposes of providing facility cleaning services to the Village of Willowbrook for the period from May 1, 2009, to April 30, 2010, a copy of which is attached hereto and incorporated herein as Exhibit "A" ("Contract"); and,

WHEREAS, the Village has determined it is in the best interests of the Village to extend the term of the Contract from May 1, 2010, to April 30, 2011, with the total amount not to exceed $18,900.00; and,

WHEREAS, Best Quality Cleaning, Inc. has agreed to provide such services as set forth in the Contract for a total cost amount not to exceed $18,900.00, as agreed to by a letter to the Village dated March 25, 2010, which is attached hereto and incorporated herein as Exhibit "B".

NOW, THEREFORE, in consideration of the foregoing recitals and the mutual covenants, conditions and agreements herein contained, the adequacy and sufficiency of which the parties hereto hereby acknowledge, the parties hereto agree as follows:

Section 1. Incorporation of Recitals. The preambles set forth hereinabove are incorporated herein as substantive provisions of this AGREEMENT as if fully set out in this Section 1.

Section 2. The Village and Best Quality Cleaning, Inc. hereby extend the term of the Contract for the period from May 1, 2010, to April 30, 2011, with the total cost amount not to exceed $18,900.00.

Section 3. Notwithstanding anything to the contrary, Best Quality Cleaning, Inc. hereby agrees to provide current insurance certificates and insurance coverage information for the period from May 1, 2010, to April 30, 2011, as otherwise described and set forth in the Contract.

Section 4. This AGREEMENT is executed in multiple counterparts, each of which shall be deemed to be and shall constitute one and the same instrument.

IN WITNESS WHEREOF, the parties hereto have set their hands and seals on the date first above written.

VILLAGE OF WILLOWBROOK, an Illinois Municipal Corporation,

By:_____
Village President

ATTEST:

_____
Village Clerk

Best Quality Cleaning, Inc.

By:_____

Its: President

ATTEST:

Ivona O'Brady

EXHIBIT "A" TO AGREEMENT

ATTACH FULLY EXECUTED COPY OF THE FOLLOWING:

SPECIFICATIONS AND CONTRACT DOCUMENTS NO. 2007-03
FOR
JANITORIAL SERVICES

CONTRACT PERIOD: MAY 1, 2009 - APRIL 30, 2010

BIDDER: BEST QUALITY CLEANING, INC., 10015 PACIFIC AVENUE, FRANKLIN PARK, IL 60131

APPROXIMATELY SIXTY-TWO (62) PAGES

RESOLUTION NO. 09-R-13

A RESOLUTION WAIVING THE COMPETITIVE BIDDING PROCESS AND AUTHORIZING THE VILLAGE PRESIDENT AND VILLAGE CLERK TO EXECUTE A CERTAIN AGREEMENT – JANITORIAL SERVICES – BETWEEN THE VILLAGE OF WILLOWBROOK AND BEST QUALITY CLEANING, INC.

WHEREAS, in the opinion of at least two-thirds (2/3) of the Trustees then holding office, it is in the best interests of the Village to waive the competitive bidding process and to authorize the President and Village Clerk to execute an Agreement with Best Quality Cleaning, Inc., for the purposes of providing janitorial services to the Village of Willowbrook.

NOW, THEREFORE, BE IT RESOLVED by the President and Board of Trustees of the Village of Willowbrook, DuPage County, Illinois, as follows;

SECTION ONE: That the competitive bidding process be waived and that the President and Village Clerk be and the same are hereby authorized to execute an Agreement with Best Quality Cleaning, Inc., in substantially the same form attached hereto as Exhibit "A" and made a part hereof, for the purposes of Best Quality Cleaning, Inc. providing janitorial services to the Village of Willowbrook.

SECTION TWO: That all resolutions or parts thereof, in conflict with the provisions of this Resolution are, to the extent of such conflict, expressly repealed.

SECTION THREE: That this Resolution shall be in full force and effect from and after its adoption, approval and publication in pamphlet form as provided by law.

ADOPTED and APPROVED this 23rd day of March, 2009.

APPROVED:

Robert A. Napoli
Acting Village President

ATTEST:

Leroy R Hansen
Village Clerk

ROLL CALL VOTE: AYES: Baker, Kelly, Mistele, Schoenbeck, O'Connor, McMahon

NAYS: 0

ABSTENTIONS: 0

ABSENT: 0

EXHIBIT "A"

AGREEMENT

THIS AGREEMENT made and entered into this 23 day of March, 2009, by and between the Village of Willowbrook, a municipal corporation of the State of Illinois, and Best Quality Cleaning, Inc.

WITNESSETH:

WHEREAS, the Constitution of the State of Illinois, 1970, Article VII, Section 10, provides in part that units of local government, including municipalities, may contract with individuals in any manner not prohibited by law or by ordinance.

WHEREAS, by Resolution 08-R-15, the Village President and Village Clerk were authorized to execute, and did execute, a certain contract with Best Quality Cleaning, Inc. for the purposes of providing facility cleaning services to the Village of Willowbrook for the period from May 1, 2008, to April 30, 2009, a copy of which is attached hereto and incorporated herein as Exhibit "A" ("Contract"); and,

WHEREAS, the Village has determined it is in the best interests of the Village to extend the term of the Contract from May 1, 2009, to April 30, 2010, with the total amount not to exceed $18,900.00; and,

WHEREAS, Best Quality Cleaning, Inc. has agreed to provide such services as set forth in the Contract for a total cost amount not to exceed $18,900.00, as agreed to by a letter to the Village dated February 24, 2009, which is attached hereto and incorporated herein as Exhibit "B".

NOW, THEREFORE, in consideration of the foregoing recitals and the mutual covenants, conditions and agreements herein contained, the adequacy and sufficiency of which the parties hereto hereby acknowledge, the parties hereto agree as follows:

Section 1. Incorporation of Recitals. The preambles set forth hereinabove are incorporated herein as substantive provisions of this AGREEMENT as if fully set out in this Section 1.

Section 2. The Village and Best Quality Cleaning, Inc. hereby extend the term of the Contract for the period from May 1, 2009, to April 30, 2010, with the total cost amount not to exceed $18,900.00.

Section 3. Notwithstanding anything to the contrary, Best Quality Cleaning, Inc. hereby agrees to provide current insurance certificates and insurance coverage information for the period from May 1, 2009, to April 30, 2010, as otherwise described and set forth in the Contract.

Section 4. This AGREEMENT is executed in multiple counterparts, each of which shall be deemed to be and shall constitute one and the same instrument.

IN WITNESS WHEREOF, the parties hereto have set their hands and seals on the date first above written.

VILLAGE OF WILLOWBROOK, an Illinois municipal corporation,

By: Robert A. Napoli
Acting Village President

ATTEST:

LeRoy Hansen
Village Clerk

Best Quality Cleaning, Inc.

By: [illegible]

Its: President

ATTEST:

Leona O'Brady

EXHIBIT "A"

RESOLUTION NO. 08-R- 15

A RESOLUTION WAIVING THE COMPETITIVE BIDDING PROCESS AND AUTHORIZING THE VILLAGE PRESIDENT AND VILLAGE CLERK TO EXECUTE A CERTAIN AGREEMENT - JANITORIAL SERVICES - BETWEEN THE VILLAGE OF WILLOWBROOK AND BEST QUALITY CLEANING, INC.

WHEREAS, in the opinion of at least two-thirds (2/3) of the Trustees then holding office, it is in the best interests of the Village to waive the competitive bidding process and to authorize the President and Village Clerk to execute an Agreement with Best Quality Cleaning, Inc., for the purposes of providing janitorial services to the Village of Willowbrook.

NOW, THEREFORE, BE IT RESOLVED by the President and Board of Trustees of the Village of Willowbrook, DuPage County, Illinois, as follows;

SECTION ONE: That the competitive bidding process be waived and that the President and Village Clerk be and the same are hereby authorized to execute an Agreement with Best Quality Cleaning, Inc., in substantially the same form attached hereto as Exhibit "A" and made a part hereof, for the purposes of Best Quality Cleaning, Inc. providing janitorial services to the Village of Willowbrook.

SECTION TWO: That all resolutions or parts thereof, in conflict with the provisions of this Resolution are, to the extent of such conflict, expressly repealed.

SECTION THREE: That this Resolution shall be in full force and effect from and after its adoption, approval and publication in pamphlet form as provided by law.

ADOPTED and APPROVED this 24th day of March, 2008.

APPROVED:

Robert A. Napoli
Village President Pro Tem

ATTEST:

Leroy R. Hansen
Village Clerk

ROLL CALL VOTE: AYES: Baker, Mistele, Brown, Napoli, Schoenbeck, McMahon

NAYS: 0

ABSTENTIONS: 0

ABSENT: 0

AGREEMENT

THIS AGREEMENT made and entered into this 24 day of March, 2008, by and between the Village of Willowbrook, a municipal corporation of the State of Illinois, and Best Quality Cleaning, Inc.

W I T N E S S E T H:

WHEREAS, the Constitution of the State of Illinois, 1970, Article VII, Section 10, provides in part that units of local government, including municipalities, may contract with individuals in any manner not prohibited by law or by ordinance.

WHEREAS, by Resolution 07-R-18, the Village President and Village Clerk were authorized to execute, and did execute, a certain contract with Best Quality Cleaning, Inc. for the purposes of providing facility cleaning services to the Village of Willowbrook for the period from May 1, 2007, to April 30, 2008, a copy of which is attached hereto and incorporated herein as Exhibit "A" ("Contract"); and,

WHEREAS, the Village has determined it is in the best interests of the Village to extend the term of the Contract from May 1, 2008, to April 30, 2009, with the total amount not to exceed $20,100.00; and,

WHEREAS, Best Quality Cleaning, Inc. has agreed to provide such services as set forth in the Contract for a total cost amount not to exceed $20,100.00, as agreed to by a letter to the Village

dated March 5, 2008, which is attached hereto and incorporated herein as Exhibit "B".

NOW, THEREFORE, in consideration of the foregoing recitals and the mutual covenants, conditions and agreements herein contained, the adequacy and sufficiency of which the parties hereto hereby acknowledge, the parties hereto agree as follows:

Section 1. Incorporation of Recitals. The preambles set forth hereinabove are incorporated herein as substantive provisions of this AGREEMENT as if fully set out in this Section 1.

Section 2. The Village and Best Quality Cleaning, Inc. hereby extend the term of the Contract for the period from May 1, 2008, to April 30, 2009, with the total cost amount not to exceed $20,100.00.

Section 3. Notwithstanding anything to the contrary, Best Quality Cleaning, Inc. hereby agrees to provide current insurance certificates and insurance coverage information for the period from May 1, 2008, to April 30, 2009, as otherwise described and set forth in the Contract.

Section 4. This AGREEMENT is executed in multiple counterparts, each of which shall be deemed to be and shall constitute one and the same instrument.

IN WITNESS WHEREOF, the parties hereto have set their hands and seals on the date first above written.

VILLAGE OF WILLOWBROOK, an Illinois municipal corporation,

By: Robert A. Napoli
Village President pro tem

ATTEST:

Leroy R Hansen
Village Clerk

Best Quality Cleaning, Inc.

By:
Its: President

ATTEST:

Melissa Richards

EXHIBIT "A" TO AGREEMENT

ATTACH FULLY EXECUTED COPY OF THE FOLLOWING:

SPECIFICATIONS AND CONTRACT DOCUMENTS NO. 2007-03
FOR
JANITORIAL SERVICES

CONTRACT PERIOD: MAY 1, 2007 - APRIL 30, 2008

BIDDER: BEST QUALITY CLEANING, INC., 10015 PACIFIC AVENUE, FRANKLIN PARK, IL 60131

APPROXIMATELY FORTY-SEVEN (47) PAGES

RESOLUTION NO. 07-R-18

A RESOLUTION AUTHORIZING THE VILLAGE PRESIDENT AND VILLAGE CLERK TO EXECUTE A CERTAIN CONTRACT - JANITORIAL SERVICES - BEST QUALITY CLEANING, INC.

BE IT RESOLVED by the President and Board of Trustees of the Village of Willowbrook, DuPage County, Illinois, that the Village President and Village Clerk be and the same are hereby authorized to execute a certain contract, Best Quality Cleaning, Inc., for the 2007-2008 Janitorial Services Contract in an amount not to exceed $20,100.00, as set forth in the contract attached hereto as Exhibit "A" which is, by this reference, expressly incorporated herein.

ADOPTED and APPROVED this 23rd day of April, 2007.

APPROVED:

Village President

ATTEST:

Leroy R Hansen

Village Clerk

ROLL CALL VOTE: AYES: Baker, Mistele, Brown, Napolitano, Schoenbeck, McMahon

NAYS: 0

ABSTENTIONS: 0

ABSENT: 0

EXHIBIT "A"

SPECIFICATIONS AND CONTRACT DOCUMENTS NO. 2007-03
for

Janitorial Services

Required For Use By:

VILLAGE OF WILLOWBROOK
Willowbrook, Illinois 60527

- **CONTRACTOR'S CERTIFICATION - BID PROPOSAL - PAGE 16**
  ** *MUST BE EXECUTED AND NOTARIZED* **
- **BIDS TO BE EXECUTED IN DUPLICATE**
- **ALL SIGNATURES TO BE SWORN BEFORE A NOTARY PUBLIC**
- **ALL INSURANCE REQUIREMENTS MUST BE MET**

CONTRACT PERIOD:	May 1, 2007 thru April 30, 2008
ACCOUNT NUMBER:	
BID DEPOSIT:	5% of Bid Amount *(See Page 4, Item 5)* *(Certified Check, Bank Cashier's Check or Bid Bond)*
BOND(S) REQUIRED:	Performance Security *(See Page 4, Item 6)*
DRAWINGS:	N/A
BID OPENING - DATE/TIME/LOCATION:	Monday, April 16, 2007 at 10:30 AM VILLAGE HALL 7760 Quincy Street Willowbrook, Illinois 60527

Issued by:

Village of Willowbrook, Illinois
7760 Quincy Street
Willowbrook, Illinois 60527
(630) 323-8215

Philip J. Modaff
Village Administrator

Sue Stanish
Director of Finance

BID NOTICE

The Village of Willowbrook will be accepting sealed bids for the item listed. Bids will be accepted at the Willowbrook Village Hall, 7760 Quincy Street, Willowbrook, until Monday, April 16, 2007 at the time shown below, at which time they will be opened and publicly read aloud.

Contract #	Bid Item	Bid Opening
2007-03	Janitorial Services	Monday, April 16, 2007 at 10:30 AM

Specifications may be obtained at the Village Hall, weekdays, between 8:30 a.m. and 4:30 p.m. Questions may be directed to the Administration Department at (630) 323-8215.

In accordance with the law and the provisions of 820ILCS 130/0.01 et seq., entitled "an Act regulating wages of laborers, mechanics, and other workers employed in any public works by the state, county, city or any public body or any political subdivision or by any one under contract for public works", not less than the prevailing rate of wages shall be paid to all laborers, workmen and mechanics performing work under this contract.

The Village of Willowbrook reserves the right to reject any or all bids, to waive technicalities, and to accept any bid which is deemed to be in the best interest of the Village of Willowbrook.

The Village of Willowbrook, Illinois, does not discriminate on the basis of disability in the admission or access to, treatment or employment in, its services, programs, or activities. Upon request, accommodation will be provided to allow individuals with disabilities to participate in all Village of Willowbrook services, programs, and activities. The Village has a designated coordinator to facilitate compliance with the Americans with Disabilities Act of 1990 (ADA), as required by Section 35.107 of the U.S. Department of Justice regulation, and to coordinate compliance with Section 504 of the Rehabilitation Act of 1973, as mandated by Section 8.5 of the U.S. Department of Housing and Urban Development regulations. For information, contact the Tim Halik, Village of Willowbrook, 7760 Quincy Street, Willowbrook, Illinois, 60527; (630) 323-8215, TDD (630)920-2259.

Upon request, this information can be made available in large print, audio tape, and/or computer disk.

I. GENERAL CONDITIONS

1. DEFINITIONS

The following words and phrases, as used herein, shall have the meaning ascribed to them, as follows:

A. BIDDER shall mean:

Best Quality Cleaning, Inc.

10015 Pacific Avenue

Franklin Park, IL 60131

B. VILLAGE shall mean the Village of Willowbrook, DuPage County Illinois, an Illinois Municipal Corporation.

2. PREPARATION AND SUBMISSION OF BID

The Bidder must submit his/her bid in duplicate on the forms furnished by the Village of Willowbrook. All blank spaces on the bid form must be filled in if applicable. Authorized signature must be the individual owner of a proprietorship, a general partner of a partnership or a duly authorized officer, attested to by the Corporate Secretary, of a Corporation. The bid is contained in these documents and must remain attached thereto when submitted. All signatures and spaces are to be completed in ink or typewritten, where applicable. Prices/costs shall be in United States dollars. Incorrect completion, execution or submission of bids shall be sufficient grounds for rejection of a bid. **The following documents <u>shall be executed</u> at the time of submission of a bid:**

- **CONTRACTOR'S CERTIFICATION BID PROPOSAL - PAGE #16**
- **BID PROPOSAL PAGE**

ALL BIDS SHALL BE SUBMITTED IN SEALED ENVELOPES CARRYING THE FOLLOWING INFORMATION ON THE FACE:

BIDDER'S NAME, ADDRESS, SUBJECT MATTER OF BID, DESIGNATED DATE OF BID OPENING AND HOUR DESIGNATED FOR BID OPENING.

3. WITHDRAWAL OF BIDS

Bidders may withdraw their bids at any time prior to the time specified in the Bid Notice as the closing time for the receipt of bids.

However, no bid shall be withdrawn or cancelled for a period of sixty (60) calendar days after said advertised closing time for the receipt of bids, nor shall the successful bid be withdrawn, cancelled, or modified after having been accepted by the Village.

4. SUBMISSION OF ALTERNATE BIDS

Bidder may submit alternate bids provided that:

- Cash bid proposals meet Village Specifications and are submitted separately.
- The Village shall not consider an alternate bid which fails to meet specifications.

5. BID DEPOSIT

When required on Page 1 of these Specifications, all bids shall be accompanied by a bid deposit in the amount specified. Bid deposits shall be in the form of a certified check, a bank cashier's check drawn on a responsible bank doing business in the United States and shall be made payable to the Village of Willowbrook, or bid bond.

The bid deposit of all except the three lowest bidders on each contract will be returned within twenty (20) calendar days after the opening of the bids. The remaining bid deposits on each contract will be returned, with the exception of the accepted Bidder, after the contract is awarded. The bid deposit of the accepted Bidder will be returned after acceptance by the Village of satisfactory performance bond where such bond is required or completion of contract where no performance bond is required.

6. SECURITY FOR PERFORMANCE

When required on Page 1 of these Specifications, the successful Bidder or Bidders shall, within thirteen (13) calendar days after acceptance of the bid by the Village, furnish a performance bond in the full amount of the contract, in a form acceptable to the Village.

In the event that the successful Bidder(s) fails to furnish the performance bond within thirteen (13) calendar days after acceptance of the bid by the Village, then the bid deposit of the successful Bidder shall be retained by the Village as liquidated damages and not as a penalty, it being agreed by the successful Bidder that said sum is a fair estimate of the amount of damages that said Village will sustain due to the successful Bidder's failure to furnish said bond.

7. EQUIVALENT PRODUCTS

In cases where a specified item is identified by a manufacturer's name, trade name or other reference, it is understood that the Bidder proposes to furnish the item as identified. If the Bidder proposes to furnish an "equal" item, the proposed "equal" item must be so indicated in the bid proposal. The Village shall be the sole determiner of the equalness of the substitute offered.

8. BASIS OF AWARD

The Village reserves the right to accept or reject any and all bids, in whole or in part, and to waive technicalities.

9. ACCEPTANCE OF BID

The Village shall make its determination with respect to bids within sixty (60) days, or within ninety (90) days where approval by other agencies is required, from the date of opening of bids. Should the Village fail to act within the times herein specified, all bids shall be rendered null and void.

10. CATALOGS

Each Bidder shall submit catalogs, descriptive literature and detailed drawings, fully detailing features, designs, construction, appointments, finishes and the like, in order to fully describe the material or work proposed to be furnished.

11. DELIVERY

All materials shipped to the Village of Willowbrook must be shipped F.O.B. freight prepaid, designated location Willowbrook, Illinois. The materials must then be delivered where directed, and unloaded by the successful Bidder, or his/her agent. All deliveries shall be deemed to be "inside delivery". Truck deliveries shall be accepted before 2:30 p.m. on weekdays only. No deliveries shall be accepted on Saturdays, Sundays or holidays. The quantity of material delivered by truck shall be ascertained from a weight certificate issued by a duly licensed public weight-master. In the case of delivery by rail, weight will be ascertained from bill of lading from originating line, but the Village reserves the right to re-weigh at the nearest available railroad scale.

12. GUARANTEES AND WARRANTEES

All guarantees and warrantees required shall be furnished by the successful Bidder and shall be delivered to the Village before the final payment voucher is issued.

13. SUBLETTING OR ASSIGNMENT OF CONTRACT OR CONTRACT FUNDS

No contract awarded by the Village of Willowbrook shall be assigned, in whole or in part, or any part of the same sub-contracted without the written consent of the Village Administrator. In no case shall such consent relieve the successful Bidder from his/her obligations or change the terms of the contract.

Any and all subcontractors shall be bound by contract to the same terms as the successful Bidder. Prior to commencing any work, subcontractors must place on file with the Village a certificate of insurance as outlined under "insurance".

The successful Bidder shall not transfer or assign any contract funds or claims due or to become due without the written approval of the Village Administrator having first been obtained.

14. COMPETENCY OF BIDDER

No bid shall be accepted from, or contract awarded to, any person, firm or corporation that is in arrears or is in default to the Village of Willowbrook upon any debt contract, or other obligation or who has failed to perform faithfully any previous contract with the Village.

The Bidder, if required, must present within forty-eight (48) hours evidence satisfactory to the Village of performance ability, possession of necessary facilities, equipment, pecuniary resources and adequate insurance to comply with the terms of these specifications and contract documents. The Village hereby reserves the right to reject any bid submitted by a Bidder who, in the sole and exclusive discretion of the Village, cannot completely perform the services or deliver the goods specified in these specifications.

15. COMPLIANCE WITH OSHA STANDARDS, THE AMERICANS WITH DISABILITIES ACT, VILLAGE ORDINANCES AND STATE LAWS

The equipment supplied to the Village of Willowbrook must comply with all requirements and standards as specified by the Occupational Safety and Health Act. All guards and protectors as well as appropriate markings will be in place before delivery. Items not meeting any OSHA specifications will be refused. Bidder may be required at his/her expense to provide training to Village employees in the operation of equipment and its maintenance at the convenience of the Village.

Each contracting agency shall ensure that every contract to which it is a party shall comply with all relevant aspects of the Americans with Disabilities Act.

The Bidder will strictly comply with all ordinances of the Village of Willowbrook, the laws of the State of Illinois and United States Government.

16. SPECIAL HANDLING

Prior to delivery of any product which is caustic, corrosive, flammable or dangerous to handle, the successful Bidder will provide written directions as to methods of handling such products, as well as the antidote or neutralizing material required for first aid.

17. MATERIAL INSPECTION AND RESPONSIBILITY

The Village shall have a right to inspect any material to be used in carrying out this contract. The Village does not assume any responsibility for the availability of any materials and equipment required under this contract.

18. TOXIC SUBSTANCES

Successful Bidder shall notify the Village of, and provide material safety data sheets for all substances used or supplied in connection with this contract which are defined as toxic under the Illinois Toxic Substances Disclosure to Employees Act.

Materials, components, or completed work not complying therewith, may be rejected by the Village and shall be replaced by the successful Bidder at no cost to the Village. Any materials or components rejected shall be removed within a reasonable time from the premises of the Village at the expense of the successful Bidder.

19. PRICE REDUCTIONS

If at any time after a contract is awarded the successful Bidder(s) makes a general price reduction in the comparable price of any material covered by the contract to customers generally, an equivalent price reduction based on similar quantities and/or considerations shall apply to the contract for the duration of the contract period (or until the price is further reduced). Such price reduction shall be effective at the same time and in the same manner as the reduction in the price to customers generally. For the purpose of this provision, a "general price reduction" shall mean any horizontal reduction in the price of an article or service offered (1) to successful Bidder's customers generally, or (2) in the successful Bidder's price schedule for the class of customers, i.e., wholesalers, jobbers, retailers, etc., which was used as the basis for bidding on this contract. An occasional sale at a lower price, or sale of distressed merchandise at a lower price, would not be considered a "general price reduction" under this provision. The successful Bidder shall invoice the Village at such reduced prices indicating on the invoice that the reduction is pursuant to the "price reduction" provision of this contract. The successful Bidder, in addition, shall within ten (10) days of any general price reduction, notify the Village Administrator of such reduction by letter. Failure to do so may result in termination of the contract.

20. TERMINATION OF CONTRACT

A. The Village may, by written notice of default to the successful Bidder, terminate the whole or part of this contract in any one of the following circumstances:

1. If the successful Bidder fails to make delivery of the supplies or to perform the services within the time specified herein or any extension thereof; or fails to provide the supplies or to perform the service at the exact price accepted by the Village (and any charges for contract changes mutually agreed to by the Village and the successful Bidder); or

2. If the successful Bidder fails to perform any of the other provisions of this contract, or so fails to make progress as to endanger performance of this contract in accordance with its terms, and in either of these two circumstances does not cure such failure within such period of time as the Village Administrator may direct in writing.

3. If it is determined that successful Bidder knowingly falsified information provided to the Village.

4. If it is determined that successful Bidder offered substantial gifts or gratuities to a Village official, employee, or agent whether in their official capacity or not.

5. Any order is entered in any proceeding against the successful Bidder decreeing the dissolution of the successful Bidder and such order remains in effect for sixty (60) days.

6. The successful Bidder shall apply to any tribunal for the appointment of a trustee or receiver of any part of the assets of the successful Bidder, or commence any proceedings relating to the successful Bidder under any bankruptcy, reorganization, arrangement, insolvency, readjustment of debt, dissolution or other liquidation law of any jurisdiction, or any such application shall be filed, or any such proceedings shall be commenced, against the successful Bidder, and the successful Bidder indicates its approval, consent or acquiescence, or an order shall be entered appointing such trustee or receiver or adjudicating the successful Bidder bankrupt or insolvent, or approving the petition in any such proceeding, and such order remains in effect for sixty (60) days.

B. In the event the Village terminates this contract in whole or in part as provided in Paragraph (A) of this clause, the Village may procure, upon such terms in such manner as the Village Administrator may deem appropriate, supplies or services similar to those so terminated, and the successful Bidder shall be liable to the Village for any excess costs for such similar supplies or service, provided that the successful Bidder shall continue the performance of this contract to the extent not terminated under the provisions of this clause.

21. EQUAL EMPLOYMENT OPPORTUNITY

Each contracting agency shall ensure every contract to which it is a party shall contain the following clause.

EQUAL EMPLOYMENT OPPORTUNITY

In the event of the contractor's non-compliance with the provisions of this equal employment opportunity clause, the Illinois Human Rights Act or the Rules and Regulations of the Illinois Department of the Human Rights ("Department"), the Contractor may be declared ineligible for future contracts or subcontracts with the State of Illinois or any of its political subdivisions or municipal corporations, and the contract may be cancelled or voided in whole or in part, and such other sanctions or penalties may be imposed or remedies invoked as provided by statute or regulation. During the performance of this contract, the contractor agrees as follows:

1. That it will not discriminate against any employee or applicant for employment because of race, color, religion, sex, marital status, national origin, or ancestry, age, physical or mental handicap unrelated to ability, or an unfavorable discharge from the military service; and further that it will examine all job classifications to determine if minority persons or women are under utilized and will take appropriate affirmative action to rectify any such under utilization.

2. That, if it hires additional employees in order to perform this contract or any portion thereof, it will determine the availability (in accordance with the department's rules and regulations) of minorities and women in the area(s) from which it may reasonably recruit and it will hire for each job classification for which employees are hired in such a way that minorities and women are not under utilized.

3. That, in all solicitations or advertisements for employees placed by it or on its behalf, it will state that all applicants will be afforded equal opportunity without discrimination because of race, color, religion, sex, marital status, national origin or ancestry, age, physical or mental handicap unrelated to ability, or an unfavorable discharge from military service.

4. That it will send to each labor organization or representative of workers with which it has or is bound by a collective bargaining or other agreement or understanding, a notice advising such labor organization or representative of the contractor's obligations under the Illinois Human Rights Act and the Department's Rules and Regulations.

   If any such labor organization or representative fails or refuses to cooperate with the contractor in its efforts to comply with such act and rules and regulations, the contractor will promptly so notify the department and the contracting agency and will recruit employees from other sources when necessary to fulfill its obligations thereunder.

5. That it will submit reports as required by the department's rules and regulations, furnish all relevant information as may from time to time be requested by the department or the contracting agency, and in all respects comply with the Illinois Human Rights Act and the Department's rules and regulations.

6. That it will permit access to all relevant books, records, accounts, and work sites by personnel of the contracting agency and the department for purposes of investigation to ascertain compliance with the Illinois Human Rights Act and the Department's rules and regulations.

7. That it will include verbatim or by reference the provisions of this clause in every subcontract it awards under which any portion of the contract obligations are undertaken or assumed, so that such provisions will be binding upon such subcontractor. In the same manner as with other provisions of this contract, the contractor will be liable for compliance with applicable provisions of this clause by such subcontractors; and further it will promptly notify the contracting agency and the department in the event any subcontractor fails or refuses to comply therewith. In addition, the contractor will not utilize any subcontractor declared by the Illinois Human Rights Commission to be ineligible for contracts or subcontracts with the State of Illinois or any of its political subdivisions or municipal corporations.

SUBCONTRACTS

Each public subcontractor shall in turn include the equal employment opportunity clause set forth within these rules and regulations in each of its subcontracts under which any portion of the contract obligations are undertaken or assumed, said inclusion to be either verbatim or by reference so that the provisions of the clause will be binding upon such subcontractors.

CONTRACTS OR SUBCONTRACTS WITH RELIGIOUS ENTITIES

The requirements of the equal employment clause set forth above with respect to non-discrimination because of religion shall not apply to a religious corporation, association, educational institution or society with respect to the employment of individuals of a particular religion for the carrying on by such corporation, association, educational institution or society of its activities.

22. INSURANCE SPECIFICATIONS

A. The successful Bidder **shall not commence work** under the contract until he/she has obtained all insurance required herein and such insurance has been approved by the Village.

B. The successful Bidder shall maintain limits no less than:

TYPE OF INSURANCE	MINIMUM INSURANCE COVERAGE	
COMMERCIAL GENERAL LIABILITY 1. Comprehensive Form 2. Premises - Operations 3. Explosion & Collapse Hazard 4. Underground Hazard 5. Products/Completed Operations Hazard 6. Contractual Liability Coverage Included 7. Broad Form Property Damage - construction projects only. 8. Independent contractors 9. Personal Injury	COMBINED SINGLE LIMIT PER OCCURRENCE FOR BODILY INJURY AND PROPERTY DAMAGE	$1,000,000
	PERSONAL INJURY PER OCCURRENCE	$1,000,000
	GENERAL AGGREGATE	$2,000,000
Business Automobile Liability Any Auto, Owned, Non-Owned Rented/Borrowed	COMBINED SINGLE LIMIT PER OCCURRENCE FOR BODILY INJURY AND PROPERTY DAMAGE	$1,000,000
Worker's Compensation and Occupational Diseases		STATUTORY LIMIT
Employer's Liability Insurance per Occurrence		$500,000

Coverage shall be at least as broad as (1) Insurance Services Office Commercial General Liability occurrence form CG 0001 with the Village named as additional insured on a form at least as broad as the attached sample endorsement including ISO Additional Insured Endorsement (Exhibit A); (2) if requested, Owners and Contractors Protective Liability policy with the Village named as insured; (3) Insurance Services Office Business Auto Liability form number CA 0001, Symbol 01 "Any Auto"; and (4) Workers Compensation as required by the Labor Code of the State of Illinois and Employers' Liability insurance.

C. In the event of accidents of any kind, the successful Bidder shall furnish the Village with copies of all reports of such accidents at the same time that the reports are forwarded to any other interested parties.

D. Any deductibles or self-insured retentions must be declared to and approved by the Village. At the option of the Village, either: the insurer shall reduce or eliminate such deductibles or self-insured retention as respects the Village, its officials, agents, employees, and volunteers; or the successful Bidder shall procure a bond guaranteeing payment of losses and related investigation, claim administration and defense expenses.

23. INSURANCE POLICY(S) ENDORSEMENT

SHALL BE PROVIDED PRIOR TO THE COMMENCEMENT OF WORK.

VILLAGE OF WILLOWBROOK ("The Village")
Attention: **Administration Department**
7760 Quincy Street
Willowbrook, Illinois 60527

A. POLICY INFORMATION.

1. Insurance Company _____

2. Policy Number _____

3. Policy Term: (From) _____ (To) _____

4. Endorsement Effective Date _____

5. Named Insured _____

6. Address of Named Insured _____

7. Limit of Liability Any One Occurrence/
   Aggregate $_____

8. Deductible or Self-Insured Retention (Nil unless otherwise specified)
   $_____

B. VERIFICATION OF COVERAGE

When required on Page 1 of these Specifications, the successful Bidder or Bidders shall, **within seven (7) calendar days** after acceptance of the bid by the Village, furnish the Village with certificates of insurance naming the Village, it officials, agents, employees and volunteers as additional insured, and with original endorsements affecting coverage required. The certificates and endorsements for each insurance policy are to be signed by a person authorized by that insurer to bind coverage on its behalf.

In the event that the successful Bidder(s) fails to furnish the insurance coverage within thirteen (13) calendar days after acceptance of the bid by the Village, then the bid deposit of the successful Bidder shall be retained by the Village as liquidated damages and not as a penalty, it being agreed by the successful Bidder that said sum is a fair estimate of the amount of damages that said Village will sustain due to the successful Bidder's failure to furnish said insurance.

The attached Additional Insured Endorsement (Exhibit A) shall be provided to the insurer for their use in providing coverage to the additional insured. Other additional insured endorsements may be utilized, if they provide a scope of coverage at least as broad as the coverage stated on the attached endorsement (Exhibit A). The Village reserves the right to request full certified copies of the insurance policies and endorsements.

C. POLICY AMENDMENTS.

Each policy shall contain, or be endorsed to contain, the following provisions:

1. INSURED.

(COMMERCIAL GENERAL LIABILITY AND BUSINESS AUTOMOBILE LIABILITY)

The Village, its officials, agents, employees, and volunteers are to be included as additional insured with regard to liability and defense of claims arising from: (a) activities performed by or on behalf of the successful Bidder, (b) products and completed operations of the successful Bidder, (c) premises owned, leased or used by the successful Bidder, and (d) automobiles owned, leased, hired or borrowed by the successful Bidder. The coverage shall contain no special limitations on the scope of protection afforded to the Village, its officials, agents, employees, and volunteers.

2. **CONTRIBUTION NOT REQUIRED.**

(COMMERCIAL GENERAL LIABILITY AND BUSINESS AUTOMOBILE LIABILITY)

The insurance afforded by the policy shall be primary insurance as respects the Village, its officials, agents, employees, and volunteers; or stand in an unbroken chain of coverage excess of the successful Bidder's scheduled underlying primary coverage. In either event, any other insurance or self-insurance maintained by the Village, its officials, agents, employees, and volunteers shall be excess of this insurance and shall not contribute with it.

3. **SEVERABILITY OF INTEREST.**

(COMMERCIAL GENERAL LIABILITY AND BUSINESS AUTOMOBILE LIABILITY)

The insurance afforded by the policy applies separately to each insured who is seeking coverage or against whom a claim is made or a suit is brought, except with respect to the Company's limit of liability.

4. **SUBCONTRACTORS.**

(ALL COVERAGES)

The successful Bidder shall include all subcontractors as insured under its policies or shall furnish separate certificates and endorsements for each subcontractor. All coverages for subcontractors shall be subject to all of the requirements stated in these General Conditions.

5. **PROVISIONS REGARDING THE INSURED'S DUTIES AFTER ACCIDENT OR LOSS.**

(COMMERCIAL GENERAL LIABILITY AND BUSINESS AUTOMOBILE LIABILITY)

Any failure to comply with reporting provisions of the policy shall not affect coverage provided to the Village, its officials, agents, employees, and volunteers.

6. **CANCELLATION NOTICE.**

(ALL COVERAGES)

The insurance afforded by the policy shall not be suspended, voided, canceled, reduced in coverage or in limits except after thirty (30) days' prior written notice by certified mail return receipt requested has been given to the Village. Such notice shall be addressed as shown in the heading of the endorsement.

7. **SUBROGATION.**

(WORKERS COMPENSATION AND EMPLOYERS' LIABILITY)

The insurer shall agree to waive all rights of subrogation against the Village, its officials, agents, employees, and volunteers for losses arising from work performed by the successful Bidder for the Village.

8. **ACCEPTABILITY OF INSURERS.**

(ALL COVERAGES)

Insurance is to be placed with insurers with a Best's rating of no less than A-,VII and licensed to do business in the State of Illinois.

9. **ASSUMPTION OF LIABILITY.**

(ALL COVERAGES)

The successful Bidder assumes liability for all injury to or death of any person or persons including employees of the successful Bidder, any subcontractor, any supplier or any other person and assumes liability for all damage to property sustained by any person or persons occasioned by or in anyway arising out of any work performed pursuant to the contract.

D. SIGNATURE OF INSURER OR AUTHORIZED REPRESENTATIVE OF THE INSURER.

I, _____ (print/type name), warrant, and by my signature hereon do so certify, that the required coverage is in place.

Signature of: _____

Authorized Representative (Original signature required on endorsement furnished to the Village).

Title: _____

Organization: _____

Address: _____

Phone: _____ Fax: _____

24. INDEMNITY HOLD HARMLESS PROVISION

To the fullest extent permitted by law, the successful Bidder hereby agrees to defend, indemnify and hold harmless the Village, its officials, agents, employees, and volunteers, against all injuries, deaths, loss, damages, claims, patent claims, suits, liabilities, judgments, costs and expenses, which may in anywise accrue against the Village, its officials, agents, employees, and volunteers; arising in whole or in part or in consequence of the performance of the work by the successful Bidder, its employees, or subcontractors, or which may in anywise result therefore, except that arising out of the sole legal cause of the Village, its officials, agents, employees, and volunteers, and the successful Bidder shall, at its own expense, appear, defend and pay all charges of attorneys and all costs and other expenses arising therefore or incurred in connection therewith, and, if any judgment shall be rendered against the Village, its officials, agents, employees, and volunteers, in any such action, the successful Bidder shall, at its own expense, satisfy and discharge same.

The successful Bidder expressly understands and agrees that any performance bond or insurance policies required by the contract, or otherwise provided by the successful Bidder, shall in no way limit the responsibility to indemnify, keep and save harmless and defend the Village, its officials, agents, employees, and volunteers, as herein provided.

The successful Bidder further agrees that to the extent that money is due the successful Bidder by virtue of the contract, an amount of said money as shall be considered necessary in the judgment of the Village, may be retained by the Village to protect itself against said loss until such claims, suits, or judgments shall have been settled or discharged and/or evidence to that effect shall have been furnished to the satisfaction of the Village.

CONTRACTOR'S CERTIFICATION - BID PROPOSAL

Best Quality Cleaning, Inc., as part of its bid on a
(Name of Contractor)

contract for Janitorial Services to The Village of Willowbrook, Illinois, hereby certifies that said contractor is not barred from bidding on the aforementioned contract as a result of a violation of either 720 ILCS 5/33E-3 or 5/33E-4.

By: _____
Authorized Agent of Contractor

SUBSCRIBED AND SWORN BEFORE ME

This 5th day of

April, 20 07.

MY COMMISSION EXPIRES:

"OFFICIAL SEAL"
MARCIA PETERSON
NOTARY PUBLIC, STATE OF ILLINOIS
MY COMMISSION EXPIRES 8/12/2008

_____
NOTARY PUBLIC

AFFIDAVIT

Customer	5326
Reference	1857 Janitorial
Amount:	$94.60

VILLAGE OF WILLOWBROOK
7760 QUINCY ST
WILLOWBROOK, IL 60521

Linda M. Siebolds, agent of Liberty Suburban Chicago Newspapers, HEREBY CERTIFIES that he/she is Legal Advertising Manager of Liberty Suburban Chicago Newspapers, that said Liberty Suburban Chicago Newspapers is a secular newspaper and has been published weekly in the Village of Willowbrook, in the county of DuPage in the state of Illinois, continuously for more than one year prior to, on and since the date of the first publication of the notice hereinafter referred to and is of general circulation throughout the county and the state.

That said agent hereby certifies that Liberty Suburban Chicago Newspapers is a newspaper as defined in Chapter 715 et seq. of the Illinois Revised Statutes.

That a notice, of which the annexed printed slip is a true copy, was published 1 (one) time in said Liberty Suburban Chicago Newspapers, namely, once each week for one successive week(s). The first publication of said notice as aforesaid was made in said newspaper dated and published on the 17th day of March A.D. 2007 and the last publication thereof was made in said newspaper dated and published on 17th day of March A.D. 2007.

IN WITNESS WHEREOF, the undersigned has caused this certification to be signed this 17th day of March A.D. 2007.

LEGAL NOTICE / PUBLIC NOTICE

REQUEST FOR BIDS

Notice is hereby given that the Village of Willowbrook is seeking bids for Janitorial Services for the Village Hall and Police Department in accordance with specifications currently on file and which may be picked up in the office of the Village of Willowbrook Village Hall, located at 7760 Quincy Street, Willowbrook, Illinois 60527. Completed bids are due in the office of the Willowbrook Village Hall no later than 10:30 am on April 16, 2007, where said bids will be opened and publicly read aloud. There is also a mandatory pre-bid meeting to be held on Friday, March 23, 2007 at 10:00 AM to review the Village Hall facility. The Village of Willowbrook reserves the right to reject any or all bids or to accept any bid which, in its judgment, will be in the best interest of the public. No bid shall be withdrawn after opening of bids without the consent of the Village of Willowbrook, Willowbrook, Illinois, for a period of sixty (60) days. Only bids responsive to the provisions of the specifications will be considered.

March 17, 2007
Liberty Suburban Newspapers 1857 WIL

Linda M. Siebolds
Legal Advertising Manager
Liberty Suburban Chicago Newspapers

Village of Willowbrook
7760 Quincy Street Willowbrook, Illinois 60521-5594
708-323-8215
Fax 708-323-0787

GARY PRETZER
PRESIDENT
BERNARD A. OGLIETTI
VILLAGE ADMINISTRATOR
PATRICK T. SPATAFORE
VILLAGE CLERK

PROJECT: JANITORIAL SERVICES

DATE AND TIME OF BID OPENING: MONDAY, APRIL 16, 2007 @ 10:30 AM

DATE	PROPOSAL OF	TYPE OF SECURITY	BIDDERS PROPOSAL
4/12	BEST QUALITY CLEANING	CERTIFIED CHECK	$1,675.00 / MO.

499156243840 Rev.1 3/05 M 62806-M/59260-O

HOLD DOCUMENT UP TO THE LIGHT TO VIEW TRUE WATERMARK

OFFICIAL CHECK

HOLD DOCUMENT UP TO THE LIGHT TO VIEW TRUE WATERMARK

CHASE

952812551 23-97/1020

Date 04/09/2007

Illinois

Remitter BEST QUILITY CLEANING

Pay: ONE THOUSAND FIVE DOLLARS AND 00 CENTS

$ **********1,005.00 ***

Pay To The Order Of VILLAGE OF WILLOWBROOK

Drawer: JPMORGAN CHASE BANK, N.A.

Stephen L. Hughes

First Vice President

Issued by Integrated Payment Systems Inc., Englewood, Colorado

JPMorgan Chase Bank, N.A., Denver, Colorado

Security Features Details on Back.

⑈131100⑈ ⑆102000979⑆ 2500952812551 9⑈

ADDITIONAL INSURED ENDORSEMENT - EXHIBIT A

Name of Insurer: _____

Name of Insured: _____

Policy Number: _____

Policy Period: _____

Endorsement Effective Date: _____

This endorsement modifies coverage provided under the following:

Commercial General Liability Coverage Part

Name of Individuals or Organization:

_____

_____

_____

WHO IS AN INSURED section of the policy / coverage document is amended to include as an insured, the individuals or organization shown above, but only with respect to liability "arising out of your work".

For purposes of this endorsement, "arising out of your work" shall mean:

1. Liability the Additional Insured may incur resulting from the actions of a contractor it hires.

2. Liability the Additional Insured may incur for negligence in the supervision of the Named Insured Contractors work.

3. Liability the Additional Insured may incur for failure to maintain safe worksite conditions.

4. Liability the Additional Insured may incur due to joint negligence of the Named Insured Contractor and the Additional Insured.

The Village of
WILLOWBROOK
7760 Quincy Street • Willowbrook, Illinois 60527-5594 • Phone (630)323-8215 • Fax (630) 323- 0787

Village President
Gary Pretzer

Village Clerk
Leroy R. Hansen

Village Trustees
Dennis Baker
Michael Brown
Michael Mistele
Timothy McMahon
Robert Napoli
Paul Schoenbeck

VILLAGE OF WILLOWBROOK

BID #2007-03 JANITORIAL SERVICES SPECIFICATIONS

There will be a MANDATORY pre-bid walk-thru of the facility on

FRIDAY - MARCH 23, 2007 - 10:00 A.M.

All bidders must participate in this walk-thru in order to submit a bid. Bidders will meet at the Village Hall Building located at 7760 Quincy Street, Willowbrook for directions please call 630-323-8215.

VILLAGE OF WILLOWBROOK

BID #2007-03 JANITORIAL SERVICES SPECIFICATIONS

I. GENERAL TERMS AND CONDITIONS

A. GENERAL SPECIFICATIONS

1. In submitting this bid, the Contractor declares that the only persons or parties interested in the proposal as principals are those named herein; and that the bid is made without collusion with another person, firm, or corporation.
2. The Contractor further declares that he or she has carefully examined the Bid, Instructions to Bidders, Specifications, and Contract; and that he or she has inspected in detail the site of the proposed work and waives all right to plead any misunderstanding regarding the same.
3. The Contractor further understands and agrees that if this bid is accepted he is to furnish and provide all labor, services, materials, supplies, equipment, apparatus, and appliances as specified in this contract, except such materials as are to be furnished by the Village in the manner and at the time therein prescribed, and in accordance with the requirements therein set forth.
4. The Contractor further agrees that the Village may at any time during the progress of work covered by this contract order other work, and that all such work and materials shall be performed as extra work at the prices delineated in the contract, unless mutually agreed otherwise in advance of such work.
5. The Contractor further agrees to execute a contract for this work at time of bid proposal.
6. The Contractor further agrees to begin work on May 1, 2007 or as otherwise agreed with the Village of Willowbrook.

B. EXAMINATION OF SITE

Bidders shall inform themselves of all the conditions under which the work is to be performed concerning the site of the work, the obstacles which may be encountered, and all other relevant matters concerning the work to be performed and the type of trimming required under this contract.

The Contractor to whom a contract is awarded will not be allowed any extra compensation by reason of any such matters of things concerning which the Contractor did not inform himself prior to bidding. The successful Contractor must employ, so far as reasonably possible as determined by the Village, such methods and means in the carrying out of his work as will not cause any interruption or interference with any other contractor.

C. MEETING BEFORE WORK BEGINS

It is mandatory that the Contractor meets with the Director of Municipal Services or his designee(s) prior to the start of work in order to review the contract specifications,

designate the appropriate project contacts, and the manner in which work will be proceeding, among other items.

D. DAMAGE TO PUBLIC OR PRIVATE PROPERTY

Any damage of public or private property caused by the Contractor's operations shall be resolved with the property owner within ten (10) days after damage occurs to the satisfaction of the Village. The Contractor shall inform the Village of any damage caused by the Contractor's operation on the day such damage occurs. Should the damage not be rectified within the time frame agreed upon or to the satisfaction of the Village, the Village reserves the right to repair or replace that which was damaged or assess the Contractor such cost as may be reasonable and related to damaged caused by the Contractor, and deduct these costs from any payment due the Contractor.

E. PREVAILING WAGES

In accordance with the law and the provisions of 820ILCS 130/0.01 et seq., entitled "an Act regulating wages of laborers, mechanics, and other workers employed in any public works by the state, county, city or any public body or any political subdivision or by any one under contract for public works", not less than the prevailing rate of wages shall be paid to all laborers, workmen and mechanics performing work under this contract. Prospective Bidders shall thoroughly familiarize themselves with the provisions of the above mentioned act and shall prepare any and all bids in strict compliance therewith. Copies of the prevailing rate of wages for this Village are on file in the office of the Village Clerk of the Village of Willowbrook.

F. ADDITIONAL WORK

The Village reserves the right to order additional work at the same unit price as provided for in the contractor's bid. Prior to commencing any additional work, the bidder shall submit his charges for performing the work and shall not proceed until the Director of Municipal Services or his designee, has approved the charges in writing.

G. SUBLETTING CONTRACT

It is mutually understood and agreed that the Contractor shall not assign, transfer, convey, sublet, or otherwise dispose of this contract or his right, title, or interest therein, or his power to execute such contract, to any other person, firm, or corporation, without the previous written consent of an authorized representative of the Village of Willowbrook; but in no case shall consent relieve the Contractor from his obligations or change the terms of the contract.

H. DEFAULT

The contract may be canceled or annulled by the Village in whole or in part by written notice of default to the Contractor upon nonperformance or violation of contract terms. Failure of the Contractor to deliver services within the time stipulated, unless extended in writing by the Village of Willowbrook, shall constitute contract default.

I. BILLING & PAYMENT

Billing shall be submitted by the Contractor on a monthly basis. Payment will be made by Village thirty (30) days or sooner after receipt of statement from Contractor

when all work has been completed in a satisfactory manner and the specifications stated herein have been met.

J. BILLING & PAYMENT

Billing shall be submitted by the Contractor on a monthly basis. Payment will be made by the Village thirty (30) days or sooner after receipt of statement from Contractor when all work has been completed in a satisfactory manner and the conditions herein have been met.

II. DETAILED CLEANING SPECIFICATIONS

A. LOCATIONS TO BE CLEANED

These specifications cover the cleaning of the Village Hall building, which consists of the Police Department, Administration offices and lobby area. These specifications are not to be construed as exclusive. It is intended that the services provided by the Contractor include all functions normally considered a part of workmanlike, satisfactory custodial work, whether or not specifically listed herein. The Village of Willowbrook's satisfaction with the cleaning services performed shall be of the utmost importance. The Contractor's employees shall always be presentable, courteous and receptive to the direction of the Village's representatives. There shall be at least one member of the Contractor's work crew capable of understanding clear directions and conversing in the English language with the Village's representatives.

B. DAYS OF SERVICE

Services shall be performed on the days and times as described below for each facility

FACILITY	DAYS	TIMES
Police Department	Sun – Sat	after 11:30 pm
Administration	Mon – Fri	between 9:00 pm-6:00 am
Village Hall Lobby Area	Mon – Fri	between 6:00 pm-6:00 am

Service will not be required in the Village Hall, Police Department, or Village Hall lobby area on the following holidays: New Year's Eve, New Year's day, Memorial day, Independence Day, Labor Day, Thanksgiving Day, Friday after Thanksgiving, Christmas Eve and Christmas Day.

C. SUPERVISION AND TRAINING

Competent English speaking supervisory personnel shall be present at each facility on a regular basis. The Contractor shall properly schedule and train all of its personnel. It is required that the supervisor visit the facilities being cleaned on a weekly basis to be sure that it has been completed in a satisfactory manner. The Village reserves the right to have the contractor assign a new contact, supervisor, and/or staff, for the Village's account if the current representative(s) are deemed unacceptable.

D. UNIFORMS

Uniforms are required to be worn (at least a smock or T-shirt with the corporate logo) and name tags are required for all employees. A picture ID with company logo must be on personnel at all times while cleaning at Village facilities.

E. **SAFETY**

The Contractor shall insure that all its employees or agents shall abide by all safety rules or regulations set by the Village of Willowbrook, as they pertain to the cleaning service operations, as well as, by general regulations and standards of the industry and in accordance with all applicable federal, state, and local regulations.

F. **SECURITY**

All cleaning service employees shall be carefully interviewed, screened, and reference checked by the Contractor before those employees are sent to any Village facility to commence providing services. Records of the same shall be provided to the Village by the Contractor for a specific cause, upon request. The Contractor shall agree to permit any person designated by the Village of Willowbrook to search any employee of the cleaning service. Any unusual occurrences will be reported immediately to the proper authority. Cleaning service personnel shall not disturb paper on desks, tables or cabinets. Cleaning crew is required to sign in and check out at the police department radio room on a daily basis.

G. **SUB-STANDARD WORK**

The Contractor recognizes that the Village, in its sole discretion, will determine whether the Contractor is performing in a timely and proper manner. By submitting a bill the Contractor is certifying that all work was completed as directed and specified in the contract and/or by Village representatives. Up to 20% will be deducted from the Contractor's monthly payments for documented instances of substandard workmanship. The deduction is taken from the payment for the month in which the substandard work was done.

H. **SUPPLIES**

The contractor shall supply all cleaning solutions, soaps, detergents, waxes, polishes, brooms, mops, rags, sponges, squeegees, buckets, mechanical polishers, buffers, vacuum cleaners and other items, tools or equipment needed to clean and sanitize the buildings. The following supplies will also be provided by the Contractor: paper towels to refill dispensers, soap for washrooms, toilet paper, urinal screens and waste can liners (see Attachment A). The Village of Willowbrook shall provide the Contractor with an appropriate secure area for the storage of cleaning supplies, implements and machinery; these implements, cleaning supplies and machinery will be kept in a sanitary and odor-free condition. All materials shall be stored in a manner/location as directed by the Village and such materials shall be moved by the Contractor if requested to do so by the Village. The contractor shall supply the Village with Material Safety Data Sheets (MSDS) for all cleaning solutions, soaps, detergents waxes and polished being used as part of the cleaning contract.

I. **WALK-THROUGH INSPECTIONS**

Mandatory quarterly walk through inspections with the cleaning supervisor will be scheduled with a Village's designee to observe and evaluate current service levels. Additional meetings will be at the Village's discretion. Punch list items must be completed no later than one week after notification from the Village. Punch list items not completed within the one week period will be subject to withholding 20% from the monthly payment for substandard work.

J. FACILITY DESCRIPTION AND SERVICE INTERVALS

Attached are descriptions of each facility and the service intervals for each area and each type of service to be performed. There are **twenty-six (26) pages** included in this section and it will be the responsibility of the Contractor to follow these directions. The Village of Willowbrook has invested considerable time in developing this section of the specification and expects that the specifications will be followed.

No other service intervals or service level will be allowed unless specifically authorized in writing by the Village of Willowbrook Director of Municipal Services.

There will be a MANDATORY pre-bid walk-thru of the facility on Friday, March 23, 2007 at 10:00 a.m. All bidders must participate in this walk-thru in order to submit a bid. Bidders will meet at the Village Hall Building located at 7760 Quincy Street, Willowbrook. For directions please call 630-323-8215.

K. OPTIONS

1. **Carpet Cleaning**
   Cleaning of carpet on an as requested basis. Carpet cleaning and floor waxing will be completed during the times listed under "Days of Service" and shall be done with minimum disruption. Furniture must be moved during stripping and waxing of the floor as well as during carpet cleaning and returned in its proper place upon completion.

2. **Initial Cleaning**
   The initial cleaning will require a total cleaning of all facilities and shall include all items listed on the specification sheets for daily, weekly, bi-weekly, monthly, quarterly and semi-annually. The Village will allow two weeks to complete the initial cleaning (May 1 – May 14, 2007). This cleaning will be used to bring the facilities up to the best standards possible.

L. MISCELLANEOUS SERVICES

The Contractor shall be responsible for immediately reporting any severe irregularities that are discovered during the course of working in the Village facilities. These may include unlocked doors, broken windows, defective plumbing, as well as loose railings, etc.

M. PROHIBITED ACTIONS

The Contractor shall maintain proper security at all facilities in which work is being conducted. This includes, but is not limited to, keeping doors locked (i.e. not propping them open) and no unauthorized individuals shall be admitted into any building at any time by the Contractor.

N. **ADDITIONAL SERVICES / EMERGENCY CONDITIONS**

The Contractor shall be capable of temporarily providing additional services and/or increased frequency of service if necessary due to emergency conditions or special use of the building (i.e. special public meetings on a weekend). Except for emergency conditions, the Village shall provide twenty-four (24) hour notice that increased services shall be required. Additional services outside of normal working hours and days of service, or requiring additional help during normal working hours, shall be paid at the hourly rate indicated in the contract.

VILLAGE OF WILLOWBROOK
BID - #2007-03 JANITORIAL SERVICES

Bidder, in submitting this bid, hereby agrees to comply with all provisions and requirements of the specifications and contract documents attached hereto. This bid shall remain in force and effect for a twelve (12) month period, from May 1, 2007 through April 30, 2008.

Facility	Address	Cost Including Supplies
Village Hall Building	7760 Quincy Street	$ 1675.00 monthly

OPTIONS

1. Carpet Cleaning	throughout building	$ no charge per request
2. Initial cleaning	All Facilities	$ no charge
3. Additional Cleaning	As needed (per person)	$ 13.00 per hour

Rates for services listed for 2007/08-contract period will not increase more than 0 % for the 2008/09-contract period. At its sole discretion, the Village of Willowbrook may extend the contract for a one-year term beginning May 1, 2008 and concluding April 30, 2009.

Name of Bidder: Best Quality Cleaning, Inc.

Address: 10015 Pacific Avenue
Franklin Park, IL 60131

Telephone No. 847-233-0202 Fax No. 847-233-0505

Signature: [signature]

Title: President

Date: April 5, 2006

Subscribed and sworn before me this 5th day of April, 2007.

My Commission Expires:

"OFFICIAL SEAL"
MARCIA PETERSON
NOTARY PUBLIC, STATE OF ILLINOIS
MY COMMISSION EXPIRES 8/12/2008

[signature]
Notary Public

REFERENCES

REFERENCES

The Contractor must list four (4) references, including at least one (1) municipality, listing firm, name, address, telephone number and contact person, for whom the Contractor has supplied janitorial services similar to those provided in these specifications, for a period no less than six (6) months.

Company Name: City of Elmhurst

Address: 209 N. York Road, Elmhurst, IL 60126

Phone # : 630-530-3034 Fax: 630-530-3048

Contact Person: Patrick Morley

Dates of Service (from – to): 2001 to present

Company Name: Village of Arlington Heights

Address33 S. Arlington Heights Rd., Arlington Hts., IL 60005

Phone # : 847-368-5860 Fax: 847-368-5993

Contact Person: Rob Balfour

Dates of Service (from – to): 1998 to present

Company Name: Village of Barrington

Address: 200 S. Hough Street, Barrington, IL 60010

Phone # : 847-304-3369 Fax: 847-382-3030

Contact Person: Mike Szymanski

Dates of Service (from – to): 2000 to present

Company Name: Village of Lincolnshire

Address: 1 Olde Half Day Road, Lincolnshire, IL 60069

Phone # : 847-883-8600 Fax: 847-883-8608

Contact Person: Randy Weist

Dates of Service (from – to): 1997 to present

BID #2007-03 JANITORIAL CONTRACT SPECIFICATION CHECKLIST

POLICE DEPARTMENT

AREA & ITEM DESCRIPTION	DAILY	WEEKLY	BI-WEEKLY	MONTHLY	QUARTERLY	SEMI-ANNUAL	SPECIAL INSTRUCTIONS
OFFICES							
Desks							
dust & spot damp wipe top	X						
dust & damp wipe sides		X					
polish desktop (wood)				X			
Chairs							
vacuum fabric	X						
dust & damp wipe frame & base	X						
polish (wood)				X			
Wastebaskets							
empty & replace liner	X						
damp wipe interior/exterior			X				
empty recycling bin	X						
Filing cabinets/credenzas							
dust & spot damp wipe		X					
polish (wood)			X				
Wall Hangings							
dust		X					
Windows, Ledges & Frames							
dust frame and ledge		X					
damp wipe frame and ledge			X				
clean interior window				X			
dust blinds			X				

BID #2007-03 JANITORIAL CONTRACT SPECIFICATION CHECKLIST

POLICE DEPARTMENT

AREA & ITEM DESCRIPTION	DAILY	WEEKLY	BI-WEEKLY	MONTHLY	QUARTERLY	SEMI-ANNUAL	SPECIAL INSTRUCTIONS
Computers/Computer Screens							
dust		x					
clean		x					
Floors							
vacuum carpet	x						
damp mop tile floors	x						
buff tile floors							every 3 days
strip & wax tile floors					x		
Miscellaneous							
wipe light switches	x						
dust/damp wipe overhead lights				x			
dust/damp wipe hvac vents				x			
dust/damp wipe doors & frames		x					
spot clean wall	x						
damp wipe telephones		x					
high dust for cobwebs		x					
COMMON OFFICE AREAS & HALLWAYS							
Desks							
dust & spot damp wipe top	x						
dust & damp wipe sides		x					
polish desktop (wood)				x			
Partitions							
dust frames		x					
damp wipe frames				x			
vacuum fabric					x		
shampoo fabric						x	

BID #2007-03 JANITORIAL CONTRACT SPECIFICATION CHECKLIST

POLICE DEPARTMENT

AREA & ITEM DESCRIPTION	DAILY	WEEKLY	BI-WEEKLY	MONTHLY	QUARTERLY	SEMI-ANNUAL	SPECIAL INSTRUCTIONS
Chairs							
vacuum fabric	x						
dust & damp wipe frame & base	x						
Wastebaskets							
empty & replace liner	x						
damp wipe interior/exterior			x				
empty recycling bins	x						
Filing cabinets/credenzas							
dust & spot damp wipe		x					
polish (wood)				x			
Wall Hangings							
dust		x					
high-dust for cobwebs				x			
Windows, Ledges & Frames							
dust frame and ledge		x					
damp wipe frame and ledge				x			
clean interior window				x			
Computers/Computer Screens							
dust		x					
clean glass		x					
Floors							
vacuum carpet	x						
damp mop tile floors	x						
buff tile floors							every 3 days
strip & wax tile floors					x		

BID #2007-03 JANITORIAL CONTRACT SPECIFICATION CHECKLIST

POLICE DEPARTMENT

AREA & ITEM DESCRIPTION	DAILY	WEEKLY	BI-WEEKLY	MONTHLY	QUARTERLY	SEMI-ANNUAL	SPECIAL INSTRUCTIONS
Miscellaneous							
wipe light switches	x						
dust/damp wipe overhead lights				x			
dust/damp wipe hvac bents				x			
spot clean kick plates	x						
polish kick plates				x			
empty outdoor ashtrays	x						
spot clean walls	x						
clean interior/ext.door glass		x					
clean & disinfect water fountain	x						
clean vent on water fountain				x			
damp wipe telephones	x						
RESTROOMS/LOCKER ROOMS							
Sinks & Showers							
clean & disinfect	x						
heavy clean & scrub shower			x				
Commodes & Urinals							
clean & disinfect	x						
Partitions							
dust top & spot wash		x					
damp clean doors		x					
damp clean entire partition			x				
Metal & Hardware							
damp wipe & polish	x						

BID #2007-03 JANITORIAL CONTRACT SPECIFICATION CHECKLIST

POLICE DEPARTMENT

AREA & ITEM DESCRIPTION	DAILY	WEEKLY	BI-WEEKLY	MONTHLY	QUARTERLY	SEMI-ANNUAL	SPECIAL INSTRUCTIONS
Mirrors							
spray clean	x						
Wastebaskets							
empty & replace liner	x						
damp wipe exterior & interior			x				
Floors							
damp mop	x						
vacuum	x						
damp wipe baseboards			x				
heavy clean & scrub tiles			x				
Lockers							
dust		x					
damp wipe		x					
Miscellaneous							
spot clean walls	x						
spot clean door & doorframe	x						
spot clean light switch	x						
refill dispensers/paper products	x						
spot clean kick plates	x						
polish kick plates			x				
KITCHEN/LUNCH ROOM							
Floors							
damp mop	x						
damp wipe base boards			x				
buff tile floor							every 3 days
strip & wax tile floors						x	

BID #2007-03 JANITORIAL CONTRACT SPECIFICATION CHECKLIST

POLICE DEPARTMENT

AREA & ITEM DESCRIPTION	DAILY	WEEKLY	BI-WEEKLY	MONTHLY	QUARTERLY	SEMI-ANNUAL	SPECIAL INSTRUCTIONS
Chairs							
damp wipe seats	x						
damp wipe frames				x			
Wastebaskets							
empty & replace liner	x						
damp wipe exterior & interior			x				
empty recycling	x						
Sink & Countertop							
clean & disinfect	x						
Appliance							
damp wipe front	x						
dust top & sides		x					
clean inside of microwave		x					
clean coffee pot and machine	x						
damp wipe entire surface			x				
clean refrigerator (to be scheduled w/Village representative beforehand)				x			
Miscellaneous							
spot clean walls	x						
spot clean door & door frame	x						
spot clean light switch	x						
refill dispensers/paper products	x						

BID #2007-03 JANITORIAL CONTRACT SPECIFICATION CHECKLIST

POLICE DEPARTMENT

AREA & ITEM DESCRIPTION	DAILY	WEEKLY	BI-WEEKLY	MONTHLY	QUARTERLY	SEMI-ANNUAL	SPECIAL INSTRUCTIONS
JAIL CELLS/BOOKING AREA							
Floors							
sweep & damp mop	x						
buff							every 3 days
strip & wax floor						x	
Table & Counter Tops							
clean & disinfect	x						
Chairs & Benches							
damp wipe seats	x						
clean & disinfect seats and frame		x					
Wastebaskets							
empty & replace liner	x						
damp wipe exterior & interior			x				
Holding Cells							
clean & disinfect floors	x						or as needed
clean & disinfect sink	x						or as needed
clean & disinfect commode	x						or as needed
clean & disinfect bed frame	x						or as needed
Miscellaneous							
spot clean walls	x						
spot clean door & door frame	x						
sport clean light switch	x						
damp wipe telephones		x					
clean interior/exterior windows		x					as needed

BID #2007-03 JANITORIAL CONTRACT SPECIFICATION CHECKLIST

ADMINISTRATION	

AREA & ITEM DESCRIPTION	DAILY	WEEKLY	BI-WEEKLY	MONTHLY	QUARTERLY	SEMI-ANNUAL	SPECIAL INSTRUCTIONS
OFFICES							
Desks							
dust & spot damp wipe top	x						
dust & damp wipe sides		x					
polish desktop (wood)				x			
Chairs							
vacuum fabric	x						
dust & damp wipe frame & base	x						
polish (wood)				x			
Wastebaskets							
empty & replace liner	x						
damp wipe interior/exterior			x				
empty recycling	x						
Filing cabinets/credenzas							
dust & spot damp wipe		x					
polish (wood)			x				
Wall Hangings							
dust		x					
Windows, Ledges & Frames							
dust frame and ledge		x					
damp wipe frame and ledge			x				
clean interior window				x			
dust blinds			x				

BID #2007-03 JANITORIAL CONTRACT SPECIFICATION CHECKLIST

ADMINISTRATION

AREA & ITEM DESCRIPTION	DAILY	WEEKLY	BI-WEEKLY	MONTHLY	QUARTERLY	SEMI-ANNUAL	SPECIAL INSTRUCTIONS
Computers/Computer Screens							
dust		x					
clean glass		x					
Floors							
vacuum carpet	x						
wet mop tile floors	x						
buff tile floors							every 3 days
strip & wax tile floors					x		
Miscellaneous							
wipe light switches	x						
dust/damp wipe overhead lights				x			
dust/damp wipe HVAC vents				x			
dust/damp wipe door & frames		x					
spot clan walls	x						
damp wipe telephone		x					
high dust for cobwebs		x					
COMMON OFFICE AREAS & HALLWAYS							
Desks							
dust & spot damp wipe top	x						
dust and damp wipe sides		x					
polish desktop (wood)				x			
Partitions							
dust frames		x					
damp wipe frames				x			
vacuum fabric					x		
shampoo fabric						x	

BID #2007-03 JANITORIAL CONTRACT SPECIFICATION CHECKLIST

ADMINISTRATION	

AREA & ITEM DESCRIPTION	DAILY	WEEKLY	BI-WEEKLY	MONTHLY	QUARTERLY	SEMI-ANNUAL	SPECIAL INSTRUCTIONS
Chairs							
vacuum fabric		x					
dust & damp wipe frame & base		x					
Wastebaskets							
empty & replace liner	x						
damp wipe interior/exterior			x				
empty recycling bins	x						
Filing cabinets/credenzas							
dust & spot damp wipe		x					
polish (wood)				x			
Reception Area Countertops							
dust & spots damp wipe	x						
Wall Hangings							
dust		x					
high-dust for cobwebs		x					
Windows, Ledges & Frames							
dust frame and ledge		x					
damp wipe frame and ledge				x			
clean interior window				x			
Computers/Computer Screens							
dust		x					
clean glass		x					

BID #2007-03 JANITORIAL CONTRACT SPECIFICATION CHECKLIST

ADMINISTRATION	

AREA & ITEM DESCRIPTION	DAILY	WEEKLY	BI-WEEKLY	MONTHLY	QUARTERLY	SEMI-ANNUAL	SPECIAL INSTRUCTIONS
Floors							
vacuum carpet	x						
damp mop tile floors	x						
buff tile floors							every 3 days
strip & wax tile floors					x		
Miscellaneous							
wipe light switches	x						
dust/damp wipe overhead lights				x			
dust/damp wipe hvac vents				x			
dust/damp wipe doors & frames		x					
spot clean kick plates	x						
polish kick plates				x			
empty outdoor ashtrays	x						
spot clean walls	x						
clean interior & exterior door glass		x					
clean & disinfect water fountain	x						
clean vent on water fountain				x			
damp wipe telephones		x					
RESTROOMS							
Sinks & Showers							
clean & disinfect		x					
Commodes & Urinals							
clean and disinfect	x						

BID #2007-03 JANITORIAL CONTRACT SPECIFICATION CHECKLIST

ADMINISTRATION	

AREA & ITEM DESCRIPTION	DAILY	WEEKLY	BI-WEEKLY	MONTHLY	QUARTERLY	SEMI-ANNUAL	SPECIAL INSTRUCTIONS
Partitions							
dust top & spot wash		x					
damp clean doors		x					
damp clean entire partition			x				
Metal & Hardware							
damp wipe & polish	x						
Mirrors							
spray clean	x						
Wastebaskets							
empty & replace liner	x						
damp wipe exterior & interior			x				
Floors							
damp mop	x						
vacuum	x						
damp wipe base boards			x				
heavy clean & scrub			x				
Miscellaneous							
spot clean walls	x						
spot clean door & door frame	x						
spot clean light switch	x						
refill dispensers/paper products	x						
spot clean kick plates	x						
polish kick plates			x				
KITCHEN/LUNCH ROOM							
Floors							
damp mop	x						
damp wipe baseboards			x				

BID #2007-03 JANITORIAL CONTRACT SPECIFICATION CHECKLIST

ADMINISTRATION

AREA & ITEM DESCRIPTION	DAILY	WEEKLY	BI-WEEKLY	MONTHLY	QUARTERLY	SEMI-ANNUAL	SPECIAL INSTRUCTIONS
buff tile floor							every 3 days
strip & wax tile floors						x	
stack chairs when mopping lunchroom	x						
Chairs							
damp wipe seats	x						
damp wipe frames			x				
Wastebaskets							
empty & replace liner	x						
damp wipe exterior & interior			x				
empty recycling bins	x						
Sink & Countertop							
clean & disinfect	x						
Appliances							
damp wipe front	x						
dust top & sides		x					
damp wipe entire surface			x				
clean microwave inside and out	x						
clean refrigerator (to be scheduled w/Village representative beforehand)				x			
clean coffee pot and machine	x						

BID #2007-03 JANITORIAL CONTRACT SPECIFICATION CHECKLIST

ADMINISTRATION	

AREA & ITEM DESCRIPTION	DAILY	WEEKLY	Bi-WEEKLY	MONTHLY	QUARTERLY	SEMI-ANNUAL	SPECIAL INSTRUCTIONS
Miscellaneous							
spot clean walls	x						
spot clean door & door frame	x						
spot clean light switch	x						
refill dispensers/paper products	x						

BID #2007-03 JANITORIAL CONTRACT SPECIFICATION CHECKLIST

VILLAGE HALL LOBBY							
AREA & ITEM DESCRIPTION	DAILY	WEEKLY	BI-WEEKLY	MONTHLY	QUARTERLY	SEMI-ANNUAL	SPECIAL INSTRUCTIONS
RESTROOMS							
Sinks, Commodes & Urinals							
clean & disinfect	x						
Partitions							
dust top & spot wash		x					
damp clean doors		x					
damp clean entire partition				x			
Metal & Hardware							
damp wipe & polish	x						
Mirrors							
spray clean	x						
Wastebaskets							
empty & replace liner	x						
damp wipe exterior & interior			x				
Floors							
damp mop	x						
damp wipe baseboards			x				
heavy clean & scrub floors		x					
seal brick floors							annually
Miscellaneous							
spot clean walls	x						
spot clean door & door frame	x						
spot clean light switch	x						
refill dispensers/paper products	x						
spot clean kick plates	x						

BID #2007-03 JANITORIAL CONTRACT SPECIFICATION CHECKLIST

VILLAGE HALL LOBBY							
AREA & ITEM DESCRIPTION	DAILY	WEEKLY	BI-WEEKLY	MONTHLY	QUARTERLY	SEMI-ANNUAL	SPECIAL INSTRUCTIONS
ENTRANCE WAYS & VESTIBULES							
Door/Windows							
clean glass interior/exterior	x						
dust/damp wipe frames/ledges		x					
Floors							
damp mop	x						
heavy clean & scrub floors		x					
vacuum carpet runners	x						
Furniture & Display Case							
damp wipe reception counters	x						
dust displays, wall hangings		x					
clean glass			x				
Outdoors -							
Empty garbage cans at front and rear and rear entrances	x						

BID #2007-03 JANITORIAL SERVICES

ATTACHMENT A

Cleaning Supplies for Janitorial Contract

ITEM	DESCRIPTION
Bath Roll Tissue	2 ply or better
Roll Paper Towels	Full Size
Multi-Fold Towels	Tri- fold
Deodorant Blocks	
Bottle Soap for dispensers	
Aerosol room fresheners (Refills)	
Floor Soap	
Can Liners	16 Gallon
Can Liners	33 Gallon
Can Liners	55 Gallon
Paper Cups	4.5 oz
Toilet Bowl Cleaner	
Stainless Steel Cleaner	
Glass Cleaners	
Multi Purpose Cleaners	
Toilet Brushes	
Hand Dusters	
Vacuum Cleaner	at least 1
Floor Scrubbers	at least 1
Floor strippers/waxers	

ACORD CERTIFICATE OF LIABILITY INSURANCE

OP ID LW
BEST-C5

DATE (MM/DD/YYYY)
03/12/07

PRODUCER

R-H INSURANCE GROUP
P.O. BOX 370
LAKE ZURICH IL 60047
Phone: 847-438-6400 Fax: 847-438-1128

THIS CERTIFICATE IS ISSUED AS A MATTER OF INFORMATION ONLY AND CONFERS NO RIGHTS UPON THE CERTIFICATE HOLDER. THIS CERTIFICATE DOES NOT AMEND, EXTEND OR ALTER THE COVERAGE AFFORDED BY THE POLICIES BELOW.

INSURERS AFFORDING COVERAGE	NAIC #
INSURER A: WEST BEND MUTUAL	
INSURER B: Western Surety Company	
INSURER C:	
INSURER D:	
INSURER E:	

INSURED

BEST QUALITY CLEANING, INC.
10015 PACIFIC AVE
FRANKLIN PARK IL 60131

COVERAGES

THE POLICIES OF INSURANCE LISTED BELOW HAVE BEEN ISSUED TO THE INSURED NAMED ABOVE FOR THE POLICY PERIOD INDICATED. NOTWITHSTANDING ANY REQUIREMENT, TERM OR CONDITION OF ANY CONTRACT OR OTHER DOCUMENT WITH RESPECT TO WHICH THIS CERTIFICATE MAY BE ISSUED OR MAY PERTAIN, THE INSURANCE AFFORDED BY THE POLICIES DESCRIBED HEREIN IS SUBJECT TO ALL THE TERMS, EXCLUSIONS AND CONDITIONS OF SUCH POLICIES. AGGREGATE LIMITS SHOWN MAY HAVE BEEN REDUCED BY PAID CLAIMS.

INSR LTR	ADD'L INSRD	TYPE OF INSURANCE	POLICY NUMBER	POLICY EFFECTIVE DATE (MM/DD/YY)	POLICY EXPIRATION DATE (MM/DD/YY)	LIMITS	
		GENERAL LIABILITY				EACH OCCURRENCE	$ 1,000,000
A		X COMMERCIAL GENERAL LIABILITY	BCA0254726	03/13/07	03/13/08	DAMAGE TO RENTED PREMISES (Ea occurrence)	$ 100,000
		CLAIMS MADE X OCCUR				MED EXP (Any one person)	$ 5,000
		X PER PROJECT				PERSONAL & ADV INJURY	$ 1,000,000
		AGGREGATE				GENERAL AGGREGATE	$ 2,000,000
		GEN'L AGGREGATE LIMIT APPLIES PER:				PRODUCTS - COMP/OP AGG	$ 2,000,000
		POLICY PRO-JECT LOC					
		AUTOMOBILE LIABILITY				COMBINED SINGLE LIMIT (Ea accident)	$ 1,000,000
		ANY AUTO					
A		X ALL OWNED AUTOS	BCA0254726	03/13/07	03/13/08	BODILY INJURY (Per person)	$
		SCHEDULED AUTOS					
A		X HIRED AUTOS	BCA0254726	03/13/07	03/13/08	BODILY INJURY (Per accident)	$
A		X NON-OWNED AUTOS	BCA0254726	03/13/07	03/13/08		
						PROPERTY DAMAGE (Per accident)	$
		GARAGE LIABILITY				AUTO ONLY - EA ACCIDENT	$
		ANY AUTO				OTHER THAN AUTO ONLY: EA ACC	$
						AGG	$
		EXCESS/UMBRELLA LIABILITY				EACH OCCURRENCE	$ 3,000,000.
A		OCCUR CLAIMS MADE	CUA0290544	03/13/07	03/13/08	AGGREGATE	$ 3,000,000.
							$
		DEDUCTIBLE					$
		RETENTION $					$
		WORKERS COMPENSATION AND EMPLOYERS' LIABILITY				X WC STATUTORY LIMITS / OTHER	
A		ANY PROPRIETOR/PARTNER/EXECUTIVE OFFICER/MEMBER EXCLUDED?	WCA0273061	03/13/07	03/13/08	E.L. EACH ACCIDENT	$ 1,000,000
A		If yes, describe under SPECIAL PROVISIONS below	WCA0273061	03/13/07	03/13/08	E.L. DISEASE - EA EMPLOYEE	$ 1,000,000
						E.L. DISEASE - POLICY LIMIT	$ 1,000,000
		OTHER					
B		JANITORIAL BOND	68582596	02/25/07	02/25/08	BLANKET	$10,000

DESCRIPTION OF OPERATIONS / LOCATIONS / VEHICLES / EXCLUSIONS ADDED BY ENDORSEMENT / SPECIAL PROVISIONS

JANITORIAL SERVICE

CERTIFICATE HOLDER

0000000

XXXXXXXXXXXXXXXXXXXXXXXXXXXXXX
TO WHOM IT MAY CONCERN
XXXXXXXXXXXXXXXXXXXXXXXXXXXXXX

CANCELLATION

SHOULD ANY OF THE ABOVE DESCRIBED POLICIES BE CANCELLED BEFORE THE EXPIRATION DATE THEREOF, THE ISSUING INSURER WILL ENDEAVOR TO MAIL XXX DAYS WRITTEN NOTICE TO THE CERTIFICATE HOLDER NAMED TO THE LEFT, BUT FAILURE TO DO SO SHALL IMPOSE NO OBLIGATION OR LIABILITY OF ANY KIND UPON THE INSURER, ITS AGENTS OR REPRESENTATIVES.

AUTHORIZED REPRESENTATIVE

KENNETH C. MATEJA Kenneth C. Mateja

© ACORD CORPORATION 1988

EXHIBIT "B"

Best Quality Cleaning, Inc.

10015 Pacific Ave., Franklin Park, IL 60131
Phone: (847) 233-0202 • Fax: (847) 233-0505
E-Mail: bqc@sbcglobal.net

"Details Are Our Business"

March 5, 2008

Village of Willowbrook
7760 Quincy Street
Willowbrook, IL 60527.

Attention: Tim Halik

We, at BQC, Inc. would be pleased to continue providing Janitorial Services to the Village of Willowbrook for the period of May 1, 2008 through April 30, 2009 under the same conditions of the existing contract.

If you would like to add or change any services for the upcoming contract year, please let me know. Otherwise, we endeavor to continue to better service your janitorial needs.

Iwona O'Brady
Iwona O'Brady

March 5, 2008

Cc: Albert Gaudyn, President
Marcia Peterson, Sales/Customer Service Representative

RECEIVED
MAR - 7 2008
VILLAGE OF WILLOWBROOK
MUNICIPAL SERVICES DEPT.

ACORD CERTIFICATE OF LIABILITY INSURANCE

OP ID CR BEST-C5

DATE (MM/DD/YYYY) 03/07/08

RODUCER

:-H INSURANCE GROUP
'.O. BOX 370
AKE ZURICH IL 60047
?hone:847-438-6400 Fax:847-438-1128

THIS CERTIFICATE IS ISSUED AS A MATTER OF INFORMATION ONLY AND CONFERS NO RIGHTS UPON THE CERTIFICATE HOLDER. THIS CERTIFICATE DOES NOT AMEND, EXTEND OR ALTER THE COVERAGE AFFORDED BY THE POLICIES BELOW.

INSURERS AFFORDING COVERAGE	NAIC #
INSURER A: WEST BEND MUTUAL	15350
INSURER B: Western Surety Company	
INSURER C:	
INSURER D:	
INSURER E:	

NSURED

BEST QUALITY CLEANING, INC.
847-233-0505
10015 PACIFIC AVE
FRANKLIN PARK IL 60131

COVERAGES

THE POLICIES OF INSURANCE LISTED BELOW HAVE BEEN ISSUED TO THE INSURED NAMED ABOVE FOR THE POLICY PERIOD INDICATED. NOTWITHSTANDING ANY REQUIREMENT, TERM OR CONDITION OF ANY CONTRACT OR OTHER DOCUMENT WITH RESPECT TO WHICH THIS CERTIFICATE MAY BE ISSUED OR MAY PERTAIN, THE INSURANCE AFFORDED BY THE POLICIES DESCRIBED HEREIN IS SUBJECT TO ALL THE TERMS, EXCLUSIONS AND CONDITIONS OF SUCH POLICIES. AGGREGATE LIMITS SHOWN MAY HAVE BEEN REDUCED BY PAID CLAIMS.

NSR LTR	ADD'L INSRD	TYPE OF INSURANCE	POLICY NUMBER	POLICY EFFECTIVE DATE (MM/DD/YY)	POLICY EXPIRATION DATE (MM/DD/YY)	LIMITS	
		GENERAL LIABILITY				EACH OCCURRENCE	$ 1,000,000
A		X COMMERCIAL GENERAL LIABILITY	BCA0254726	03/13/08	03/13/09	DAMAGE TO RENTED PREMISES (Ea occurence)	$ 100,000
		CLAIMS MADE X OCCUR				MED EXP (Any one person)	$ 5,000
		X PER PROJECT				PERSONAL & ADV INJURY	$ 1,000,000
		AGGREGATE				GENERAL AGGREGATE	$ 2,000,000
		GEN'L AGGREGATE LIMIT APPLIES PER:				PRODUCTS - COMP/OP AGG	$ 2,000,000
		POLICY X PRO-JECT LOC					
		AUTOMOBILE LIABILITY				COMBINED SINGLE LIMIT (Ea accident)	$ 1,000,000
		ANY AUTO					
A		X ALL OWNED AUTOS	BCA0254726	03/13/08	03/13/09	BODILY INJURY (Per person)	$
		SCHEDULED AUTOS					
A		X HIRED AUTOS	BCA0254726	03/13/08	03/13/09	BODILY INJURY (Per accident)	$
A		X NON-OWNED AUTOS	BCA0254726	03/13/08	03/13/09		
						PROPERTY DAMAGE (Per accident)	$
		GARAGE LIABILITY				AUTO ONLY - EA ACCIDENT	$
		ANY AUTO				OTHER THAN AUTO ONLY: EA ACC	$
						AGG	$
		EXCESS/UMBRELLA LIABILITY				EACH OCCURRENCE	$ 3,000,000.
A		X OCCUR CLAIMS MADE	CUA0290544	03/13/08	03/13/09	AGGREGATE	$ 3,000,000.
							$
		DEDUCTIBLE					$
		RETENTION $					$
		WORKERS COMPENSATION AND EMPLOYERS' LIABILITY				X WC STATUTORY LIMITS / OTHER	
A		ANY PROPRIETOR/PARTNER/EXECUTIVE OFFICER/MEMBER EXCLUDED?	WCA0273061	03/13/08	03/13/09	E.L. EACH ACCIDENT	$ 1,000,000
A		If yes, describe under SPECIAL PROVISIONS below	WCA0273061	03/13/08	03/13/09	E.L. DISEASE - EA EMPLOYEE	$ 1,000,000
						E.L. DISEASE - POLICY LIMIT	$ 1,000,000
		OTHER					
B		JANITORIAL BOND	68582596	02/25/08	02/25/09	BLANKET	$100,000

DESCRIPTION OF OPERATIONS / LOCATIONS / VEHICLES / EXCLUSIONS ADDED BY ENDORSEMENT / SPECIAL PROVISIONS

JANITORIAL SERVICE//THE VILLAGE OF WILLOWBROOK, ITS OFFICIALS, AGENTS, EMPLOYEES, AND VOLUNTEERS ARE INCLUDED AS ADDITIONAL INSUREDS ON A PRIMARY NON CONTRIBUTORY BASIS AS RESPECTS GENERAL LIABILITY WHEN REQUIRED BY WRITTEN CONTRACT. (WB1482 ATTACHED)

CERTIFICATE HOLDER

WILL075

VILLAGE OF WILLOWBROOK
ATTN: ADMINISTRATION DEPT
7760 QUINCY STREET
WILLOWBROOK IL 60527

CANCELLATION

SHOULD ANY OF THE ABOVE DESCRIBED POLICIES BE CANCELLED BEFORE THE EXPIRATION DATE THEREOF, THE ISSUING INSURER WILL ENDEAVOR TO MAIL 30 DAYS WRITTEN NOTICE TO THE CERTIFICATE HOLDER NAMED TO THE LEFT, BUT FAILURE TO DO SO SHALL IMPOSE NO OBLIGATION OR LIABILITY OF ANY KIND UPON THE INSURER, ITS AGENTS OR REPRESENTATIVES.

AUTHORIZED REPRESENTATIVE

KENNETH C. MATEJA Kenneth C. Mateja

© ACORD CORPORATION 1988

EXHIBIT "B"

Best Quality Cleaning, Inc.

10015 Pacific Ave., Franklin Park, IL 60131
Phone: (847) 233-0202 * Fax: (847) 233-0505
E-Mail: bqc@sbcglobal.net

"Details Are Our Business"

February 24, 2009

Village of Willowbrook
7760 Quincy Street
Willowbrook, IL 60527

Attention: Tim Halik

We, at BQC, Inc. would be pleased to continue providing Janitorial Services to the Village of Willowbrook for the period of May 1, 2009 through April 30, 2010 under the same conditions of the existing contract, and with a price reduction.

Current Monthly Price:	$1,675.00
New Monthly Price:	$1,575.00

Please Note:
Paper products, liners, Kleenex, hand soap, etc. will still be included in the monthly price.

Iwona O'Brady

February 24, 2009

Cc: Albert Gaudyn, President

RECEIVED
FEB 24 2009
VILLAGE OF WILLOWBROOK
BUILDING & ZONING DIVISION

EXHIBIT "B"

Best Quality Cleaning, Inc.

10015 Pacific Ave., Franklin Park, IL 60131
Phone: (847) 233-0202 * Fax: (847) 233-0505
E-Mail: bqc@sbcglobal.net

"Details Are Our Business"

March 25, 2010

Tim Hallik
Village of Willowbrook
7760 Quincy Street
Willowbrook, IL 60527

Dear Tim,

Best Quality Cleaning, Inc. would like to extend our contract for 1 year. The effective date will be May 1, 2010 through April 30, 2011. The monthly price of $1575.00 per month will remain the same for the 1 year.

Sincerely,

Melissa Richards
Vice President
Best Quality Cleaning, Inc.

RECEIVED
MAR 25 2010
VILLAGE OF WILLOWBROOK
MUNICIPAL SERVICES DEPT.

VILLAGE OF WILLOWBROOK

BOARD MEETING
AGENDA ITEM - HISTORY/COMMENTARY

ITEM TITLE:

A RESOLUTION WAIVING THE COMPETITIVE BIDDING PROCESS AND AUTHORIZING THE PRESIDENT AND VILLAGE CLERK TO EXECUTE A CERTAIN AGREEMENT – STREETLIGHT MAINTENANCE SERVICES – BETWEEN THE VILLAGE OF WILLOWBROOK AND MEADE ELECTRIC COMPANY, INC.

AGENDA NO. 7.S

AGENDA DATE: 04/12/10

STAFF REVIEW: Tim Halik, Director of Municipal Services **SIGNATURE:** T. Halik

LEGAL REVIEW: William Hennessy **SIGNATURE:** W. Hennessy

RECOMMENDED BY VILLAGE ADMIN.: **SIGNATURE:** Meyer C. Pein

REVIEWED & APPROVED BY COMMITTEE: **YES** ☒ on 3/8/10 **NO** ☐ **N/A** ☐

ITEM HISTORY (PREVIOUS VILLAGE BOARD REVIEWS, ACTIONS RELATED TO THIS ITEM, OTHER PERTINENT HISTORY)

The Village's contract for maintenance of streetlights is with Meade Electric Company, Inc. Staff is very pleased with the quality of services currently provided by Meade Electric. Therefore, Meade was asked whether they would consider a contract extension for a subsequent season with no price increase. Meade responded that although the cost of the products (bulbs, fuses, and other electrical equipment) have risen, to keep the contract with the Village they would agree to another one-year contract extension and would not seek a rate increase. Therefore, the rates we would pay for the 10/11 season would be the same as the 09/10 season. In addition, since this is the fourth consecutive year Meade has agreed to extend its contract prices for a subsequent year, the Village has not seen a rate increase over the last four years. We are paying the same unit prices for streetlight maintenance services as we did in 2007.

The Municipal Services Committee has discussed this item at their regular meeting on March 8, 2010 and recommends that the Village Board approve a contract extension with Meade Electric Company, Inc. without an increase in unit prices.

ITEM COMMENTARY (BACKGROUND, DISCUSSION, RECOMMENDATIONS, ETC.)

Staff recommends that the competitive bidding process be waived and a one-year contract extension be awarded to Meade Electric Company, Inc. at the same unit prices offered as in the 2009 season.

ACTION PROPOSED:

Adopt the resolution.

RESOLUTION NO. 10-R-17

A RESOLUTION WAIVING THE COMPETITIVE BIDDING PROCESS AND AUTHORIZING THE VILLAGE PRESIDENT AND VILLAGE CLERK TO EXECUTE A CERTAIN AGREEMENT – STREETLIGHT MAINTENANCE SERVICES – BETWEEN THE VILLAGE OF WILLOWBROOK AND MEADE ELECTRIC COMPANY, INC.

WHEREAS, in the opinion of at least two-thirds (2/3) of the Trustees then holding office, it is in the best interests of the Village to waive the competitive bidding process and to authorize the President and Village Clerk to execute an Agreement with Meade Electric Company, Inc., for the purposes of providing streetlight maintenance services to the Village of Willowbrook.

NOW, THEREFORE, BE IT RESOLVED by the President and Board of Trustees of the Village of Willowbrook, DuPage County, Illinois, as follows;

SECTION ONE: That the competitive bidding process be waived and that the President and Village Clerk be and the same are hereby authorized to execute an Agreement with Meade Electric Company, Inc., in substantially the same form attached hereto as Exhibit "A" and made a part hereof, for the purposes of Meade Electric Company, Inc. providing streetlight maintenance services to the Village of Willowbrook.

SECTION TWO: That all resolutions or parts thereof, in conflict with the provisions of this Resolution are, to the extent of such conflict, expressly repealed.

SECTION THREE: That this Resolution shall be in full force and effect from and after its adoption, approval and publication in pamphlet form as provided by law.

ADOPTED and APPROVED this 12th day of April, 2010.

APPROVED:

_____
Village President

ATTEST:

_____
Village Clerk

ROLL CALL VOTE: AYES:_____

NAYS:_____

ABSTENTIONS:_____

ABSENT:_____

AGREEMENT

THIS AGREEMENT made and entered into this 12 day of April, 2010, by and between the Village of Willowbrook, a municipal corporation of the State of Illinois, and Meade Electric Company, Inc.

WITNESSETH:

WHEREAS, the Constitution of the State of Illinois, 1970, Article VII, Section 10, provides in part that units of local government, including municipalities, may contract with individuals in any manner not prohibited by law or by ordinance.

WHEREAS, by Resolution 09-R-17, the Village President and Village Clerk were authorized to execute, and did execute, a certain contract with Meade Electric Company, Inc. for the purposes of providing streetlight maintenance services to the Village of Willowbrook for the period from May 1, 2009, to April 30, 2010, a copy of which is attached hereto and incorporated herein as Exhibit "A" ("Contract"); and,

WHEREAS, the Village has determined it is in the best interests of the Village to extend the term of the Contract from May 1, 2010, to April 30, 2011, with the total amount not to exceed $9,972.00; and,

WHEREAS, Meade Electric Company, Inc. has agreed to provide such services as set forth in the Contract for a total cost amount not to exceed $9,972.00, as agreed to by a letter to the Village dated March 29, 2010, which is attached hereto and incorporated herein as Exhibit "B".

NOW, THEREFORE, in consideration of the foregoing recitals and the mutual covenants, conditions and agreements herein contained, the adequacy and sufficiency of which the parties hereto hereby acknowledge, the parties hereto agree as follows:

Section 1. Incorporation of Recitals. The preambles set forth hereinabove are incorporated herein as substantive provisions of this AGREEMENT as if fully set out in this Section 1.

Section 2. The Village and Meade Electric Company, Inc. hereby extend the term of the Contract for the period from May 1, 2010, to April 30, 2011, with the total cost amount not to exceed $9,972.00.

Section 3. Notwithstanding anything to the contrary, Meade Electric Company, Inc. hereby agrees to provide current insurance certificates and insurance coverage information for the period from May 1, 2010, to April 30, 2011, as otherwise described and set forth in the Contract.

Section 4. This AGREEMENT is executed in multiple counterparts, each of which shall be deemed to be and shall constitute one and the same instrument.

IN WITNESS WHEREOF, the parties hereto have set their hands and seals on the date first above written.

VILLAGE OF WILLOWBROOK, an Illinois
Municipal Corporation,

By:_____
Village President

ATTEST:

_____
Village Clerk

Meade Electric Company, Inc.

By: _____

Its: Vice President

ATTEST:

EXHIBIT "A" TO AGREEMENT

ATTACH FULLY EXECUTED COPY OF THE FOLLOWING:

SPECIFICATIONS AND CONTRACT DOCUMENTS
FOR
STREETLIGHT MAINTENANCE SERVICES

CONTRACT PERIOD: MAY 1, 2009 - APRIL 30, 2010

BIDDER: MEADE ELECTRIC COMPANY, INC., 9550 w. 55TH STREET, SUITE A, McCOOK, IL 60525

APPROXIMATELY FORTY-EIGHT (48) PAGES

RESOLUTION NO. 09-R-17

A RESOLUTION WAIVING THE COMPETITIVE BIDDING PROCESS AND AUTHORIZING THE VILLAGE PRESIDENT AND VILLAGE CLERK TO EXECUTE A CERTAIN AGREEMENT – STREETLIGHT MAINTENANCE SERVICES – BETWEEN THE VILLAGE OF WILLOWBROOK AND MEADE ELECTRIC COMPANY, INC.

WHEREAS, in the opinion of at least two-thirds (2/3) of the Trustees then holding office, it is in the best interests of the Village to waive the competitive bidding process and to authorize the President and Village Clerk to execute an Agreement with Meade Electric Company, Inc., for the purposes of providing streetlight maintenance services to the Village of Willowbrook.

NOW, THEREFORE, BE IT RESOLVED by the President and Board of Trustees of the Village of Willowbrook, DuPage County, Illinois, as follows;

SECTION ONE: That the competitive bidding process be waived and that the President and Village Clerk be and the same are hereby authorized to execute an Agreement with Meade Electric Company, Inc., in substantially the same form attached hereto as Exhibit "A" and made a part hereof, for the purposes of Meade Electric Company, Inc. providing streetlight maintenance services to the Village of Willowbrook.

SECTION TWO: That all resolutions or parts thereof, in conflict with the provisions of this Resolution are, to the extent of such conflict, expressly repealed.

SECTION THREE: That this Resolution shall be in full force and effect from and after its adoption, approval and publication in pamphlet form as provided by law.

ADOPTED and APPROVED this 13th day of April, 2009.

APPROVED:

Robert A. Napoli
Acting Village President

ATTEST:

Leroy A. Hansen
Village Clerk

ROLL CALL VOTE:

AYES: Kelly, Mistele, Schoenbeck, O'Connor, McMahon

NAYS: 0

ABSTENTIONS: 0

ABSENT: Baker

AGREEMENT

THIS AGREEMENT made and entered into this 13 day of April, 2009, by and between the Village of Willowbrook, a municipal corporation of the State of Illinois, and Meade Electric Company, Inc.

WITNESSETH:

WHEREAS, the Constitution of the State of Illinois, 1970, Article VII, Section 10, provides in part that units of local government, including municipalities, may contract with individuals in any manner not prohibited by law or by ordinance.

WHEREAS, by Resolution 08-R-20, the Village President and Village Clerk were authorized to execute, and did execute, a certain contract with Meade Electric Company, Inc. for the purposes of providing streetlight maintenance services to the Village of Willowbrook for the period from May 1, 2008, to April 30, 2009, a copy of which is attached hereto and incorporated herein as Exhibit "A" ("Contract"); and,

WHEREAS, the Village has determined it is in the best interests of the Village to extend the term of the Contract from May 1, 2009, to April 30, 2010, with the total amount not to exceed $9,972.00; and,

WHEREAS, Meade Electric Company, Inc. has agreed to provide such services as set forth in the Contract for a total cost amount not to exceed $9,972.00, as agreed to by a letter to the Village dated March 27, 2009, which is attached hereto and incorporated herein as Exhibit "B".

NOW, THEREFORE, in consideration of the foregoing recitals and the mutual covenants, conditions and agreements herein contained, the adequacy and sufficiency of which the parties hereto hereby acknowledge, the parties hereto agree as follows:

Section 1. Incorporation of Recitals. The preambles set forth hereinabove are incorporated herein as substantive provisions of this AGREEMENT as if fully set out in this Section 1.

Section 2. The Village and Meade Electric Company, Inc.

hereby extend the term of the Contract for the period from May 1, 2009, to April 30, 2010, with the total cost amount not to exceed $9,972.00.

Section 3. Notwithstanding anything to the contrary, Meade Electric Company, Inc. hereby agrees to provide current insurance certificates and insurance coverage information for the period from May 1, 2009, to April 30, 2010, as otherwise described and set forth in the Contract.

Section 4. This AGREEMENT is executed in multiple counterparts, each of which shall be deemed to be and shall constitute one and the same instrument.

IN WITNESS WHEREOF, the parties hereto have set their hands and seals on the date first above written.

VILLAGE OF WILLOWBROOK, an Illinois municipal corporation,

By:_____
Acting Village President

ATTEST:

_____
Village Clerk

Meade Electric Company, Inc.

By: Michael K. Knutson
Michael K. Knutson
Vice President
Its:_____

ATTEST:
Joan T. Muselli

EXHIBIT "A"

RESOLUTION NO. 08-R-20

A RESOLUTION WAIVING THE COMPETITIVE BIDDING PROCESS AND AUTHORIZING THE VILLAGE PRESIDENT AND VILLAGE CLERK TO EXECUTE A CERTAIN AGREEMENT - STREETLIGHT MAINTENANCE SERVICES - BETWEEN THE VILLAGE OF WILLOWBROOK AND MEADE ELECTRIC COMPANY, INC.

WHEREAS, in the opinion of at least two-thirds (2/3) of the Trustees then holding office, it is in the best interests of the Village to waive the competitive bidding process and to authorize the President and Village Clerk to execute an Agreement with Meade Electric Company, Inc., for the purposes of providing streetlight maintenance services to the Village of Willowbrook.

NOW, THEREFORE, BE IT RESOLVED by the President and Board of Trustees of the Village of Willowbrook, DuPage County, Illinois, as follows;

SECTION ONE: That the competitive bidding process be waived and that the President and Village Clerk be and the same are hereby authorized to execute an Agreement with Meade Electric Company, Inc., in substantially the same form attached hereto as Exhibit "A" and made a part hereof, for the purposes of Meade Electric Company, Inc. providing streetlight maintenance services to the Village of Willowbrook.

SECTION TWO: That all resolutions or parts thereof, in conflict with the provisions of this Resolution are, to the extent of such conflict, expressly repealed.

SECTION THREE: That this Resolution shall be in full force and effect from and after its adoption, approval and publication in pamphlet form as provided by law.

ADOPTED and APPROVED this 14th day of April, 2008.

APPROVED:

Gary Tulgar
Village President

ATTEST:

LeroyR.Hansen
Village Clerk

ROLL CALL VOTE: AYES: Baker, Mistele, Brown, Napoli, McMahon

NAYS: 0

ABSTENTIONS: 0

ABSENT: Schoenbeck

AGREEMENT

THIS AGREEMENT made and entered into this 14 day of April, 2008, by and between the Village of Willowbrook, a municipal corporation of the State of Illinois, and Meade Electric Company, Inc.

W I T N E S S E T H:

WHEREAS, the Constitution of the State of Illinois, 1970, Article VII, Section 10, provides in part that units of local government, including municipalities, may contract with individuals in any manner not prohibited by law or by ordinance.

WHEREAS, by Resolution 07-R-16, the Village President and Village Clerk were authorized to execute, and did execute, a certain contract with Meade Electric Company, Inc. for the purposes of providing streetlight maintenance services to the Village of Willowbrook for the period from May 1, 2007, to April 30, 2008, a copy of which is attached hereto and incorporated herein as Exhibit "A" ("Contract"); and,

WHEREAS, the Village has determined it is in the best interests of the Village to extend the term of the Contract from May 1, 2008, to April 30, 2009, with the total amount not to exceed $9,972.00; and,

WHEREAS, Meade Electric Company, Inc. has agreed to provide such services as set forth in the Contract for a total cost amount not to exceed $9,972.00, as agreed to by a letter to the Village

dated April 4, 2008, which is attached hereto and incorporated herein as Exhibit "B".

NOW, THEREFORE, in consideration of the foregoing recitals and the mutual covenants, conditions and agreements herein contained, the adequacy and sufficiency of which the parties hereto hereby acknowledge, the parties hereto agree as follows:

Section 1. Incorporation of Recitals. The preambles set forth hereinabove are incorporated herein as substantive provisions of this AGREEMENT as if fully set out in this Section 1.

Section 2. The Village and Meade Electric Company, Inc. hereby extend the term of the Contract for the period from May 1, 2008, to April 30, 2009, with the total cost amount not to exceed $9,972.00.

Section 3. Notwithstanding anything to the contrary, Meade Electric Company, Inc. hereby agrees to provide current insurance certificates and insurance coverage information for the period from May 1, 2008, to April 30, 2009, as otherwise described and set forth in the Contract.

Section 4. This AGREEMENT is executed in multiple counterparts, each of which shall be deemed to be and shall constitute one and the same instrument.

IN WITNESS WHEREOF, the parties hereto have set their hands and seals on the date first above written.

VILLAGE OF WILLOWBROOK, an Illinois municipal corporation,

By: _____
Village President

ATTEST:

_____
Village Clerk

Meade Electric Company, Inc.

By: _____

Its: VICE PRESIDENT

ATTEST:

_____

EXHIBIT "A" TO AGREEMENT

ATTACH FULLY EXECUTED COPY OF THE FOLLOWING:

SPECIFICATIONS AND CONTRACT DOCUMENTS
FOR
STREETLIGHT MAINTENANCE SERVICES

CONTRACT PERIOD: MAY 1, 2007 - APRIL 30, 2008

BIDDER: MEADE ELECTRIC COMPANY, INC., 9550 W. 55TH STREET, SUITE A, McCOOK, IL 60525

APPROXIMATELY THITY-FIVE (35) PAGES

RESOLUTION NO. 07-R-16

A RESOLUTION WAIVING THE COMPETITIVE BIDDING PROCESS AND AUTHORIZING THE VILLAGE PRESIDENT TO ACCEPT A PROPOSAL FOR STREETLIGHT MAINTENANCE SERVICES - MEADE ELECTRIC COMPANY, INC.

BE IT RESOLVED by the President and Board of Trustees of the Village of Willowbrook, DuPage County, Illinois, that the competitive bidding process is hereby waived and that the Village President is hereby authorized and directed to execute a certain agreement between the Village of Willowbrook and Meade Electric Company, Inc., for Streetlight Maintenance Services, per the terms and conditions contained in the documents attached hereto and incorporated herein as Exhibit "A".

ADOPTED and APPROVED this 23th day of April, 2007

APPROVED:

Village President

ATTEST:

Leroy Hansen
Village Clerk

ROLL CALL VOTE:: AYES: Baker, Mistele, Brown, Napoli, Schaedbeck, McMahon

NAYS: 0

ABSTENTIONS: 0

ABSENT: 0

ORIGINAL

SPECIFICATIONS AND DOCUMENTS
for

Street Light Maintenance Services

Required For Use By:

VILLAGE OF WILLOWBROOK
Willowbrook, Illinois 60527

- **PROPOSALS TO BE EXECUTED IN DUPLICATE**
- **ALL SIGNATURES TO BE SWORN BEFORE A NOTARY PUBLIC**
- **ALL INSURANCE REQUIREMENTS MUST BE MET**

ACCOUNT NUMBER: _____

DEPOSIT: 5% of Bid Amount *(See Page 4, Item 5)*
(Certified Check, Bank Cashier's Check or Bid Bond)

BOND(S) REQUIRED: *(See Page 4, Item 6)*

DRAWINGS: N/A

PROPOSALS DUE: Monday, April 16, 2007 by 12:00 Noon

VILLAGE HALL
7760 Quincy Street
Willowbrook, Illinois 60527

Issued by:

Village of Willowbrook, Illinois
7760 Quincy Street
Willowbrook, Illinois 60527
(630) 323-8215

Philip J. Modaff
Village Administrator

Sue Stanish
Director of Finance

REQUEST FOR PROPOSAL

The Village of Willowbrook will be accepting proposals for the item listed. Proposals will be accepted at the Willowbrook Village Hall, 7760 Quincy Street, Willowbrook, until Monday, April 16, 2007 at 12:00 Noon.

Specifications may be obtained at the Village Hall, weekdays, between 8:30 a.m. and 4:30 p.m. Questions may be directed to the Municipal Services Department at (630) 920-2261.

In accordance with the law and the provisions of 820ILCS 130/0.01 et seq., entitled "an Act regulating wages of laborers, mechanics, and other workers employed in any public works by the state, county, city or any public body or any political subdivision or by any one under contract for public works", not less than the prevailing rate of wages shall be paid to all laborers, workmen and mechanics performing work under this proposal.

The Village of Willowbrook reserves the right to reject any or all proposals, to waive technicalities, and to accept any proposal which is deemed to be in the best interest of the Village of Willowbrook.

The Village of Willowbrook, Illinois, does not discriminate on the basis of disability in the admission or access to, treatment or employment in, its services, programs, or activities. Upon request, accommodation will be provided to allow individuals with disabilities to participate in all Village of Willowbrook services, programs, and activities. The Village has a designated coordinator to facilitate compliance with the Americans with Disabilities Act of 1990 (ADA), as required by Section 35.107 of the U.S. Department of Justice regulation, and to coordinate compliance with Section 504 of the Rehabilitation Act of 1973, as mandated by Section 8.5 of the U.S. Department of Housing and Urban Development regulations. For information, contact the Tim Halik, Village of Willowbrook, 7760 Quincy Street, Willowbrook, Illinois, 60527; (630) 323-8215, TDD (630)920-2259.

Upon request, this information can be made available in large print, audio tape, and/or computer disk.

I. GENERAL CONDITIONS

1. DEFINITIONS

The following words and phrases, as used herein, shall have the meaning ascribed to them, as follows:

A. CONTRACTOR or VENDOR shall mean:

Meade Electric Company, Inc.

9550 W. 55th Street, Suite A

McCook, IL 60525

B. VILLAGE shall mean the Village of Willowbrook, DuPage County Illinois, an Illinois Municipal Corporation.

2. PREPARATION AND SUBMISSION OF PROPOSAL

The vendor must submit his/her proposal in duplicate on the forms furnished by the Village of Willowbrook. All blank spaces on the proposal form must be filled in if applicable. Authorized signature must be the individual owner of a proprietorship, a general partner of a partnership or a duly authorized officer, attested to by the Corporate Secretary, of a Corporation. The proposal is contained in these documents and must remain attached thereto when submitted. All signatures and spaces are to be completed in ink or typewritten, where applicable. Prices/costs shall be in United States dollars.

ALL PROPOSALS SHALL BE SUBMITTED INCLUDING THE FOLLOWING INFORMATION ON THE FACE:

VENDOR'S NAME, ADDRESS, SUBJECT MATTER OF PROPOSAL, DESIGNATED DUE DATE AND HOUR DESIGNATED FOR PROPOSALS TO BE SUBMITTED BY.

3. WITHDRAWAL OF PROPOSAL

Vendors may withdraw their proposals at any time prior to the time specified in the Request for Proposal Notice as the closing time for the receipt of proposals.

However, no proposal shall be withdrawn or cancelled for a period of sixty (60) calendar days after said advertised closing time for the submittal of proposals, nor shall the successful proposal be withdrawn, cancelled, or modified after having been accepted by the Village.

4. SUBMISSION OF ALTERNATE PROPOSALS

Vendor may submit alternate proposals provided that:

- Proposals meet Village Specifications and are submitted separately.
- The Village shall not consider an alternate proposal which fails to meet specifications.

5. BID DEPOSIT

When required on Page 1 of these Specifications, all bids shall be accompanied by a bid deposit in the amount specified. Bid deposits shall be in the form of a certified check, a bank cashier's check drawn on a responsible bank doing business in the United States and shall be made payable to the Village of Willowbrook, or bid bond.

The bid deposit of all except the three lowest bidders on each contract will be returned within twenty (20) calendar days after the opening of the bids. The remaining bid deposits on each contract will be returned, with the exception of the accepted Bidder, after the contract is awarded. The bid deposit of the accepted Bidder will be returned after acceptance by the Village of satisfactory performance bond where such bond is required or completion of contract where no performance bond is required.

6. SECURITY FOR PERFORMANCE

When required on Page 1 of these Specifications, the successful Bidder or Bidders shall, within seven (7) calendar days after acceptance of the bid by the Village, furnish a performance bond in the full amount of the contract, in a form acceptable to the Village.

In the event that the successful Bidder(s) fails to furnish the performance bond within seven (7) calendar days after acceptance of the bid by the Village, then the bid deposit of the successful Bidder shall be retained by the Village as liquidated damages and not as a penalty, it being agreed by the successful Bidder that said sum is a fair estimate of the amount of damages that said Village will sustain due to the successful Bidder's failure to furnish said bond.

7. EQUIVALENT PRODUCTS

In cases where a specified item is identified by a manufacturer's name, trade name or other reference, it is understood that the Vendor proposes to furnish the item as identified. If the Vendor proposes to furnish an "equal" item, the proposed "equal" item must be so indicated in the proposal. The Village shall be the sole determiner of the equalness of the substitute offered.

8. BASIS OF AWARD

The Village reserves the right to accept or reject any and all proposals, in whole or in part, and to waive technicalities.

9. ACCEPTANCE OF PROPOSAL

The Village shall make its determination with respect to proposals within sixty (60) days, or within ninety (90) days where approval by other agencies is required, from the deadline date of receiving proposals. Should the Village fail to act within the times herein specified, all proposals shall be rendered null and void.

10. CATALOGS

Each Vendor shall submit catalogs, descriptive literature and detailed drawings, fully detailing features, designs, construction, appointments, finishes and the like, in order to fully describe the material or work proposed to be furnished.

11. DELIVERY

All materials shipped to the Village of Willowbrook must be shipped F.O.B. freight prepaid, designated location Willowbrook, Illinois. The materials must then be delivered where directed, and unloaded by the successful Vendor, or his/her agent. All deliveries shall be deemed to be "inside delivery". Truck deliveries shall be accepted before 2:30 p.m. on weekdays only. No deliveries shall be accepted on Saturdays, Sundays or holidays. The quantity of material delivered by truck shall be ascertained from a weight certificate issued by a duly licensed public weight-master. In the case of delivery by rail, weight will be ascertained from bill of lading from originating line, but the Village reserves the right to re-weigh at the nearest available railroad scale.

12. GUARANTEES AND WARRANTEES

All guarantees and warrantees required shall be furnished by the successful Vendor and shall be delivered to the Village before the final payment voucher is issued.

13. SUBLETTING OR ASSIGNMENT OF CONTRACT OR CONTRACT FUNDS

No proposal accepted by the Village of Willowbrook shall be assigned, in whole or in part, or any part of the same sub-contracted without the written consent of the Village Administrator. In no case shall such consent relieve the successful Vendor from his/her obligations or change the terms of the contract.

Any and all subcontractors shall be bound by contract to the same terms as the successful Vendor. Prior to commencing any work, subcontractors must place on file with the Village a certificate of insurance as outlined under "insurance".

The successful Vendor shall not transfer or assign any contract funds or claims due or to become due without the written approval of the Village Administrator having first been obtained.

14. COMPETENCY OF CONTRACTOR

No proposal shall be accepted from any person, firm or corporation that is in arrears or is in default to the Village of Willowbrook upon any debt, or other obligation or who has failed to perform faithfully any previous contract with the Village.

The Contractor, if required, must present within forty-eight (48) hours evidence satisfactory to the Village of performance ability, possession of necessary facilities, equipment, pecuniary resources and adequate insurance to comply with the terms of these specifications. The Village hereby reserves the right to reject any proposal submitted by a Vendor who, in the sole and exclusive discretion of the Village, cannot completely perform the services or deliver the goods specified in these specifications.

15. COMPLIANCE WITH OSHA STANDARDS, THE AMERICANS WITH DISABILITIES ACT, VILLAGE ORDINANCES AND STATE LAWS

The equipment supplied to the Village of Willowbrook must comply with all requirements and standards as specified by the Occupational Safety and Health Act. All guards and protectors as well as appropriate markings will be in place before delivery. Items not meeting any OSHA specifications will be refused. Vendor may be required at his/her expense to provide training to Village employees in the operation of equipment and its maintenance at the convenience of the Village.

Each contracting agency shall ensure that every contract to which it is a party shall comply with all relevant aspects of the Americans with Disabilities Act.

The Vendor will strictly comply with all ordinances of the Village of Willowbrook, the County of DuPage, and the laws of the State of Illinois and United States Government.

16. SPECIAL HANDLING

Prior to delivery of any product which is caustic, corrosive, flammable or dangerous to handle, the successful Vendor will provide written directions as to methods of handling such products, as well as the antidote or neutralizing material required for first aid.

17. MATERIAL INSPECTION AND RESPONSIBILITY

The Village shall have a right to inspect any material to be used in carrying out this proposal. The Village does not assume any responsibility for the availability of any materials and equipment required under this proposal.

18. TOXIC SUBSTANCES

Successful Vendor shall notify the Village of, and provide material safety data sheets for all substances used or supplied in connection with this contract which are defined as toxic under the Illinois Toxic Substances Disclosure to Employees Act.

Materials, components, or completed work not complying therewith, may be rejected by the Village and shall be replaced by the successful Vendor at no cost to the Village. Any materials or components rejected shall be removed within a reasonable time from the premises of the Village at the expense of the successful Vendor.

19. PRICE REDUCTIONS

If at any time after a proposal is accepted the successful Vendor makes a general price reduction in the comparable price of any material covered by the contract to customers generally, an equivalent price reduction based on similar quantities and/or considerations shall apply to the proposal for the duration of the job (or until the price is further reduced). Such price reduction shall be effective at the same time and in the same manner as the reduction in the price to customers generally. For the purpose of this provision, a "general price reduction" shall mean any horizontal reduction in the price of an article or service offered (1) to successful Vendor's customers generally, or (2) in the successful Vendor's price schedule for the class of customers, i.e., wholesalers, jobbers, retailers, etc., which was used as the basis for submittal on this proposal. An occasional sale at a lower price, or sale of distressed merchandise at a lower price, would not be considered a "general price reduction" under this provision. The successful Vendor shall invoice the Village at such reduced prices indicating on the invoice that the reduction is pursuant to the "price reduction" provision of this contract. The successful Vendor, in addition, shall within ten (10) days of any general price reduction, notify the Village Administrator of such reduction by letter. Failure to do so may result in termination of the proposal.

20. TERMINATION OF PROPOSAL

A. The Village may, by written notice of default to the successful Vendor, terminate the whole or part of this proposal in any one of the following circumstances:

1. If the successful Vendor fails to make delivery of the supplies or to perform the services within the time specified herein or any extension thereof; or fails to provide the supplies or to perform the service at the exact price accepted by the Village (and any charges for contract changes mutually agreed to by the Village and the successful Vendor); or

2. If the successful Vendor fails to perform any of the other provisions of this proposal, or so fails to make progress as to endanger performance of this proposal in accordance with its terms, and in either of these two circumstances does not cure such failure within such period of time as the Village Administrator may direct in writing.

3. If it is determined that successful Vendor knowingly falsified information provided to the Village.

4. If it is determined that successful Vendor offered substantial gifts or gratuities to a Village official, employee, or agent whether in their official capacity or not.

5. Any order is entered in any proceeding against the successful Vendor decreeing the dissolution of the successful Vendor and such order remains in effect for sixty (60) days.

6. The successful Vendor shall apply to any tribunal for the appointment of a trustee or receiver of any part of the assets of the successful Vendor, or commence any proceedings relating to the successful Vendor under any bankruptcy, reorganization, arrangement, insolvency, readjustment of debt, dissolution or other liquidation law of any jurisdiction, or any such application shall be filed, or any such proceedings shall be commenced, against the successful Vendor, and the successful Vendor indicates its approval, consent or acquiescence, or an order shall be entered appointing such trustee or receiver or adjudicating the successful Vendor bankrupt or insolvent, or approving the petition in any such proceeding, and such order remains in effect for sixty (60) days.

B. In the event the Village terminates this contract in whole or in part as provided in Paragraph (A) of this clause, the Village may procure, upon such terms in such manner as the Village Administrator may deem appropriate, supplies or services similar to those so terminated, and the successful Vendor shall be liable to the Village for any excess costs for such similar supplies or service, provided that the successful Vendor shall continue the performance of this proposal to the extent not terminated under the provisions of this clause.

21. EQUAL EMPLOYMENT OPPORTUNITY

Each contracting agency shall ensure every contract to which it is a party shall contain the following clause.

EQUAL EMPLOYMENT OPPORTUNITY

In the event of the contractor's non-compliance with the provisions of this equal employment opportunity clause, the Illinois Human Rights Act or the Rules and Regulations of the Illinois Department of the Human Rights ("Department"), the Contractor may be declared ineligible for future contracts or subcontracts with the State of Illinois or any of its political subdivisions or municipal corporations, and the contract may be cancelled or voided in whole or in part, and such other sanctions or penalties may be imposed or remedies invoked as provided by statute or regulation. During the performance of this contract, the contractor agrees as follows:

1. That it will not discriminate against any employee or applicant for employment because of race, color, religion, sex, marital status, national origin, or ancestry, age, physical or mental handicap unrelated to ability, or an unfavorable discharge from the military service; and further that it will examine all job classifications to determine if minority persons or women are under utilized and will take appropriate affirmative action to rectify any such under utilization.

2. That, if it hires additional employees in order to perform this work proposal or any portion thereof, it will determine the availability (in accordance with the department's rules and regulations) of minorities and women in the area(s) from which it may reasonably recruit and it will hire for each job classification for which employees are hired in such a way that minorities and women are not under utilized.

3. That, in all solicitations or advertisements for employees placed by it or on its behalf, it will state that all applicants will be afforded equal opportunity without discrimination because of race, color, religion, sex, marital status, national origin or ancestry, age, physical or mental handicap unrelated to ability, or an unfavorable discharge from military service.

4. That it will send to each labor organization or representative of workers with which it has or is bound by a collective bargaining or other agreement or understanding, a notice advising such labor organization or representative of the contractor's obligations under the Illinois Human Rights Act and the Department's Rules and Regulations.

   If any such labor organization or representative fails or refuses to cooperate with the contractor in its efforts to comply with such act and rules and regulations, the contractor will promptly so notify the department and the contracting agency and will recruit employees from other sources when necessary to fulfill its obligations thereunder.

5. That it will submit reports as required by the department's rules and regulations, furnish all relevant information as may from time to time be requested by the department or the contracting agency, and in all respects comply with the Illinois Human Rights Act and the Department's rules and regulations.

6. That it will permit access to all relevant books, records, accounts, and work sites by personnel of the contracting agency and the department for purposes of investigation to ascertain compliance with the Illinois Human Rights Act and the Department's rules and regulations.

7. That it will include verbatim or by reference the provisions of this clause in every subcontract it awards under which any portion of the contract obligations are undertaken or assumed, so that such provisions will be binding upon such subcontractor. In the same manner as with other provisions of this contract, the contractor will be liable for compliance with applicable provisions of this clause by such subcontractors; and further it will promptly notify the contracting agency and the department in the event any subcontractor fails or refuses to comply therewith. In addition, the contractor will not utilize any subcontractor declared by the Illinois Human Rights Commission to be ineligible for contracts or subcontracts with the State of Illinois or any of its political subdivisions or municipal corporations.

SUBCONTRACTS

Each public subcontractor shall in turn include the equal employment opportunity clause set forth within these rules and regulations in each of its subcontracts under which any portion of the contract obligations are undertaken or assumed, said inclusion to be either verbatim or by reference so that the provisions of the clause will be binding upon such subcontractors.

CONTRACTS OR SUBCONTRACTS WITH RELIGIOUS ENTITIES

The requirements of the equal employment clause set forth above with respect to non-discrimination because of religion shall not apply to a religious corporation, association, educational institution or society with respect to the employment of individuals of a particular religion for the carrying on by such corporation, association, educational institution or society of its activities.

22. INSURANCE SPECIFICATIONS

A. The successful Vendor **shall not commence work** under the proposal until he/she has obtained all insurance required herein and such insurance has been approved by the Village.

B. The successful Vendor shall maintain limits no less than:

TYPE OF INSURANCE	MINIMUM INSURANCE COVERAGE
COMMERCIAL GENERAL LIABILITY	
1. Comprehensive Form 2. Premises - Operations 3. Explosion & Collapse Hazard 4. Underground Hazard 5. Products/Completed Operations Hazard 6. Contractual Liability Coverage Included 7. Broad Form Property Damage - construction projects only. 8. Independent contractors 9. Personal Injury	COMBINED SINGLE LIMIT PER OCCURRENCE FOR BODILY INJURY AND PROPERTY DAMAGE **$1,000,000** PERSONAL INJURY PER OCCURRENCE **$1,000,000** GENERAL AGGREGATE **$2,000,000**
Business Automobile Liability Any Auto, Owned, Non-Owned Rented/Borrowed	**COMBINED SINGLE LIMIT PER OCCURRENCE FOR BODILY INJURY AND PROPERTY DAMAGE** **$1,000,000**
Worker's Compensation and Occupational Diseases	**STATUTORY LIMIT**
Employer's Liability Insurance per Occurrence	**$500,000**

Coverage shall be at least as broad as (1) Insurance Services Office Commercial General Liability occurrence form CG 0001 with the Village named as additional insured on a form at least as broad as the attached sample endorsement including ISO Additional Insured Endorsement (Exhibit A); (2) if requested, Owners and Contractors Protective Liability policy with the Village named as insured; (3) Insurance Services Office Business Auto Liability form number CA 0001, Symbol 01 "Any Auto"; and (4) Workers Compensation as required by the Labor Code of the State of Illinois and Employers' Liability insurance.

C. In the event of accidents of any kind, the successful Vendor shall furnish the Village with copies of all reports of such accidents at the same time that the reports are forwarded to any other interested parties.

D. Any deductibles or self-insured retentions must be declared to and approved by the Village. At the option of the Village, either: the insurer shall reduce or eliminate such deductibles or self-insured retention as respects the Village, its officials, agents, employees, and volunteers; or the successful Vendor shall procure a bond guaranteeing payment of losses and related investigation, claim administration and defense expenses.

23. INSURANCE POLICY(S) ENDORSEMENT

SHALL BE PROVIDED PRIOR TO THE COMMENCEMENT OF WORK.

VILLAGE OF WILLOWBROOK ("The Village")
Attention: **Administration Department**
7760 Quincy Street
Willowbrook, Illinois 60527

A. POLICY INFORMATION.

1. Insurance Company _____

2. Policy Number _____

3. Policy Term: (From) _____ (To) _____

4. Endorsement Effective Date _____

5. Named Insured _____

6. Address of Named Insured _____

7. Limit of Liability Any One Occurrence/
   Aggregate $_____

8. Deductible or Self-Insured Retention (Nil unless otherwise specified)
   $_____

B. VERIFICATION OF COVERAGE

When required on Page 1 of these Specifications, the successful Vendor shall, **within seven (7) calendar days** after acceptance of the proposal by the Village, furnish the Village with certificates of insurance naming the Village, it officials, agents, employees and volunteers as additional insureds, and with original endorsements affecting coverage required. The certificates and endorsements for each insurance policy are to be signed by a person authorized by that insurer to bind coverage on its behalf.

In the event that the successful Bidder(s) fails to furnish the insurance coverage within seven (7) calendar days after acceptance of the bid by the Village, then the bid deposit of the successful Bidder shall be retained by the Village as liquidated damages and not as a penalty, it being agreed by the successful Bidder that said sum is a fair estimate of the amount of damages that said Village will sustain due to the successful Bidder's failure to furnish said insurance.

The attached Additional Insured Endorsement (Exhibit A) shall be provided to the insurer for their use in providing coverage to the additional insured. Other additional insured endorsements may be utilized, if they provide a scope of coverage at least as broad as the coverage stated on the attached endorsement (Exhibit A). The Village reserves the right to request full certified copies of the insurance policies and endorsements.

C. POLICY AMENDMENTS.

Each policy shall contain, or be endorsed to contain, the following provisions:

1. INSURED.

(COMMERCIAL GENERAL LIABILITY AND BUSINESS AUTOMOBILE LIABILITY)

The Village, its officials, agents, employees, and volunteers are to be included as additional insureds with regard to liability and defense of claims arising from: (a) activities performed by or on behalf of the successful Bidder, (b) products and completed operations of the successful Bidder, (c) premises owned, leased or used by the successful Bidder, and (d) automobiles owned, leased, hired or borrowed by the successful Vendor. The coverage shall contain no special limitations on the scope of protection afforded to the Village, its officials, agents, employees, and volunteers.

2. **CONTRIBUTION NOT REQUIRED.**

(COMMERCIAL GENERAL LIABILITY AND BUSINESS AUTOMOBILE LIABILITY)

The insurance afforded by the policy shall be primary insurance as respects the Village, its officials, agents, employees, and volunteers; or stand in an unbroken chain of coverage excess of the successful Vendor's scheduled underlying primary coverage. In either event, any other insurance or self-insurance maintained by the Village, its officials, agents, employees, and volunteers shall be excess of this insurance and shall not contribute with it.

3. **SEVERABILITY OF INTEREST.**

(COMMERCIAL GENERAL LIABILITY AND BUSINESS AUTOMOBILE LIABILITY)

The insurance afforded by the policy applies separately to each insured who is seeking coverage or against whom a claim is made or a suit is brought, except with respect to the Company's limit of liability.

4. **SUBCONTRACTORS.**

(ALL COVERAGES)

The successful Vendor shall include all subcontractors as insured under its policies or shall furnish separate certificates and endorsements for each subcontractor. All coverages for subcontractors shall be subject to all of the requirements stated in these General Conditions.

5. **PROVISIONS REGARDING THE INSURED'S DUTIES AFTER ACCIDENT OR LOSS.**

(COMMERCIAL GENERAL LIABILITY AND BUSINESS AUTOMOBILE LIABILITY)

Any failure to comply with reporting provisions of the policy shall not affect coverage provided to the Village, its officials, agents, employees, and volunteers.

6. **CANCELLATION NOTICE.**

(ALL COVERAGES)

The insurance afforded by the policy shall not be suspended, voided, canceled, reduced in coverage or in limits except after thirty (30) days' prior written notice by certified mail return receipt requested has been given to the Village. Such notice shall be addressed as shown in the heading of the endorsement.

7. **SUBROGATION.**

(WORKERS COMPENSATION AND EMPLOYERS' LIABILITY)

The insurer shall agree to waive all rights of subrogation against the Village, its officials, agents, employees, and volunteers for losses arising from work performed by the successful Vendor for the Village.

8. **ACCEPTABILITY OF INSURERS.**

(ALL COVERAGES)

Insurance is to be placed with insurers with a Best's rating of no less than A-,VII and licensed to do business in the State of Illinois.

9. **ASSUMPTION OF LIABILITY.**

(ALL COVERAGES)

The successful Vendor assumes liability for all injury to or death of any person or persons including employees of the successful Vendor, any subcontractor, any supplier or any other person and assumes liability for all damage to property sustained by any person or persons occasioned by or in anyway arising out of any work performed pursuant to the contract.

D. SIGNATURE OF INSURER OR AUTHORIZED REPRESENTATIVE OF THE INSURER.

I, _____ (print/type name), warrant, and by my signature hereon do so certify, that the required coverage is in place.

Signature of: _____

Authorized Representative (Original signature required on endorsement furnished to the Village).

Title: _____

Organization: _____

Address: _____

Phone: _____ Fax: _____

24. INDEMNITY HOLD HARMLESS PROVISION

To the fullest extent permitted by law, the successful Vendor hereby agrees to defend, indemnify and hold harmless the Village, its officials, agents, employees, and volunteers, against all injuries, deaths, loss, damages, claims, patent claims, suits, liabilities, judgments, costs and expenses, which may in anywise accrue against the Village, its officials, agents, employees, and volunteers; arising in whole or in part or in consequence of the performance of the work by the successful Vendor, its employees, or subcontractors, or which may in anywise result therefore, except that arising out of the sole legal cause of the Village, its officials, agents, employees, and volunteers, and the successful Vendor shall, at its own expense, appear, defend and pay all charges of attorneys and all costs and other expenses arising therefore or incurred in connection therewith, and, if any judgment shall be rendered against the Village, its officials, agents, employees, and volunteers, in any such action, the successful Vendor shall, at its own expense, satisfy and discharge same.

The successful Vendor expressly understands and agrees that any performance bond or insurance policies required by the proposal, or otherwise provided by the successful Vendor, shall in no way limit the responsibility to indemnify, keep and save harmless and defend the Village, its officials, agents, employees, and volunteers, as herein provided.

The successful Vendor further agrees that to the extent that money is due the successful Vendor by virtue of the contract, an amount of said money as shall be considered necessary in the judgment of the Village, may be retained by the Village to protect itself against said loss until such claims, suits, or judgments shall have been settled or discharged and/or evidence to that effect shall have been furnished to the satisfaction of the Village.

CONTRACTOR'S CERTIFICATION - BID PROPOSAL

Meade Electric Company, Inc., as part of its
(Name of Contractor)

proposal for Street Light Maintenance Services to The Village of Willowbrook, Illinois, hereby certifies that said contractor is not barred from bidding on the aforementioned proposal as a result of a violation of either 720 ILCS 5/33E-3 or 5/33E-4.

By: _____
Authorized Agent of Contractor

SUBSCRIBED AND SWORN BEFORE ME

This 16th day of

April, 20 07.

MY COMMISSION EXPIRES:

May 15, 2010

Joan T. Maselli
NOTARY PUBLIC

"OFFICIAL SEAL"
JOAN T. MASELLI
Notary Public, State of Illinois
My Commission Expires 05/15/10

ADDITIONAL INSURED ENDORSEMENT - EXHIBIT A

Name of Insurer: See attached Certificate of Insurance

Name of Insured: _____

Policy Number: _____

Policy Period: _____

Endorsement Effective Date: _____

This endorsement modifies coverage provided under the following:

Commercial General Liability Coverage Part

Name of Individuals or Organization:

_____

_____

_____

WHO IS AN INSURED section of the policy / coverage document is amended to include as an insured, the individuals or organization shown above, but only with respect to liability "arising out of your work".

For purposes of this endorsement, "arising out of your work" shall mean:

1. Liability the Additional Insured may incur resulting from the actions of a contractor it hires.

2. Liability the Additional Insured may incur for negligence in the supervision of the Named Insured Contractors work.

3. Liability the Additional Insured may incur for failure to maintain safe worksite conditions.

4. Liability the Additional Insured may incur due to joint negligence of the Named Insured Contractor and the Additional Insured.

ACORD. CERTIFICATE OF INSURANCE

DATE (MM/DD/YY) 12/27/06

PRODUCER

ROBERT B. MCMANUS, INC
111 W JACKSON BLVD, STE 1134
CHICAGO, IL 60604
(312) 786-9090 FAX: 341-1133

THIS CERTIFICATE IS ISSUED AS A MATTER OF INFORMATION ONLY AND CONFERS NO RIGHTS UPON THE CERTIFICATE HOLDER. THIS CERTIFICATE DOES NOT AMEND, EXTEND OR ALTER THE COVERAGE AFFORDED BY THE POLICIES BELOW.

COMPANIES AFFORDING COVERAGE

COMPANY A QBE Insurance Corp.

COMPANY B ST. PAUL TRAVELERS

COMPANY C SAFETY NATIONAL CASUALTY CORP.

COMPANY D AMERICAN ZURICH INSURANCE

INSURED

MEADE ELECTRIC CO., INC.
9550 W. 55TH ST.,STE.A, MCCOOK,IL
650 S. Lake St., Gary, IN 46403
552 VERA COURT, JOLIET, IL
3454 WASHINGTON ST.,PARK CITY,IL

COVERAGES

THIS IS TO CERTIFY THAT THE POLICIES OF INSURANCE LISTED BELOW HAVE BEEN ISSUED TO THE INSURED NAMED ABOVE FOR THE POLICY PERIOD INDICATED, NOTWITHSTANDING ANY REQUIREMENT, TERM OR CONDITION OF ANY CONTRACT OR OTHER DOCUMENT WITH RESPECT TO WHICH THIS CERTIFICATE MAY BE ISSUED OR MAY PERTAIN, THE INSURANCE AFFORDED BY THE POLICIES DESCRIBED HEREIN IS SUBJECT TO ALL THE TERMS, EXCLUSIONS AND CONDITIONS OF SUCH POLICIES. LIMITS SHOWN MAY HAVE BEEN REDUCED BY PAID CLAIMS.

CO LTR	TYPE OF INSURANCE	POLICY NUMBER	POLICY EFFECTIVE DATE (MM/DD/YY)	POLICY EXPIRATION DATE (MM/DD/YY)	LIMITS	
A	GENERAL LIABILITY X COMMERCIAL GENERAL LIABILITY CLAIMS MADE X OCCUR OWNER'S & CONTRACTOR'S PROT *PER PROJECT AGGREGATE	HMG00103 XCU Coverage	06/25/06	06/25/07	GENERAL AGGREGATE PRODUCTS - COMP/OP AGG PERSONAL & ADV INJURY EACH OCCURRENCE FIRE DAMAGE (Any one fire) MED EXP (Any one person)	$2,000,000 $2,000,000 $1,000,000 $1,000,000 $ 100,000 $ 5,000
B	AUTOMOBILE LIABILITY X ANY AUTO X ALL OWNED AUTOS X SCHEDULED AUTOS X HIRED AUTOS X NON-OWNED AUTOS	P810-0442C998-COF	06/25/06	06/25/07	COMBINED SINGLE LIMIT BODILY INJURY (Per person) BODILY INJURY (Per accident) PROPERTY DAMAGE	$1,000,000 $ $ $
	GARAGE LIABILITY ANY AUTO				AUTO ONLY - EA ACCIDENT OTHER THAN AUTO ONLY: EACH ACCIDENT AGGREGATE	$ $ $
D	EXCESS LIABILITY X UMBRELLA FORM OTHER THAN UMBRELLA FORM	AUC 5914470-01	12/25/06	06/25/08	EACH OCCURRENCE AGGREGATE	$10,000,000 $10,000,000 $
C	WORKERS COMPENSATION AND EMPLOYERS' LIABILITY THE PROPRIETOR/ PARTNERS/EXECUTIVE OFFICERS ARE: X INCL EXCL	AGC-1J78-IL* *IL & IN SELF-INS.	01/01/07	01/01/09	X STATUTORY LIMITS EACH ACCIDENT DISEASE - POLICY LIMIT DISEASE - EACH EMPLOYEE	 $1,000,000 $1,000,000 $1,000,000
	OTHER					

DESCRIPTION OF OPERATIONS/LOCATIONS/VEHICLES/SPECIAL ITEMS

**** Evidence of Insurance Only ****

CERTIFICATE HOLDER

**** Sample ****

**** Sample ****

CANCELLATION

SHOULD ANY OF THE ABOVE DESCRIBED POLICIES BE CANCELLED BEFORE THE EXPIRATION DATE THEREOF, THE ISSUING COMPANY WILL ~~ENDEAVOR~~ TO MAIL 30 DAYS WRITTEN NOTICE TO THE CERTIFICATE HOLDER NAMED TO THE LEFT, BUT FAILURE TO MAIL SUCH NOTICE SHALL IMPOSE NO OBLIGATION OR LIABILITY OF ANY KIND UPON THE COMPANY, ITS AGENTS OR REPRESENTATIVES.

AUTHORIZED REPRESENTATIVE

Brian McManus

REC#779

THE AMERICAN INSTITUTE OF ARCHITECTS

AIA Document A310

Bid Bond

KNOW ALL MEN BY THESE PRESENTS, THAT WE Meade Electric Company, Inc.
9550 W. 55th Street, Suite A, McCook, IL 60525

as Principal, hereinafter called the Principal, and Continental Casualty Company
333 S. Wabash Ave, Chicago, IL 60604

a corporation duly organized under the laws of the State of IL

as Surety, hereinafter called the Surety, are held and firmly bound unto Village of Willowbrook
7760 Quincy Street, Willowbrook, IL 60527

as Obligee, hereinafter called the Obligee, in the sum of Five Percent of Amount Bid
Dollars ($ 5%),

for the payment of which sum well and truly to be made, the said Principal and the said Surety, bind ourselves, our heirs, executors, administrators, successors and assigns, jointly and severally, firmly by these presents.

WHEREAS, the Principal has submitted a bid for Street Light Maintenance Services

NOW, THEREFORE, if the Obligee shall accept the bid of the Principal and the Principal shall enter into a Contract with the Obligee in accordance with the terms of such bid, and give such bond or bonds as may be specified in the bidding or Contract Documents with good and sufficient surety for the faithful performance of such Contract and for the prompt payment of labor and materials furnished in the prosecution thereof, or in the event of the failure of the Principal to enter such Contract and give such bond or bonds, if the Principal shall pay to the Obligee the difference not to exceed the penalty hereof between the amount specified in said bid and such larger amount for which the Obligee may in good faith contract with another party to perform the Work covered by said bid, then this obligation shall be null and void, otherwise to remain in full force and effect.

Signed and sealed this 16th day of April 2007

Ted Grafa
(Witness)

Meade Electric Company, Inc.
(Principal)
By: [signature] VICE PRESIDENT
(Title)

CONTINENTAL CASUALTY COMPANY CORPORATE SEAL 1897

Pam Kb
(Witness)

Continental Casualty Company
(Surety) (Seal)
By: Susan K. Simmons
Attorney-in-Fact Susan K. Simons (Title)

POWER OF ATTORNEY APPOINTING INDIVIDUAL ATTORNEY-IN-FACT

Know All Men By These Presents, That Continental Casualty Company, an Illinois corporation, National Fire Insurance Company of Hartford, an Illinois corporation, and American Casualty Company of Reading, Pennsylvania, a Pennsylvania corporation (herein called "the CNA Companies"), are duly organized and existing corporations having their principal offices in the City of Chicago, and State of Illinois, and that they do by virtue of the signatures and seals herein affixed hereby make, constitute and appoint

Susan K. Symons

of Chicago, IL, their true and lawful Attorney(s)-in-Fact with full power and authority hereby conferred to sign, seal and execute for and on their behalf bonds, undertakings and other obligatory instruments of similar nature

Surety Bond Number: Bid Bond

Principal: Meade Electric Company, Inc.

Obligee: Village of Willowbrook

and to bind them thereby as fully and to the same extent as if such instruments were signed by a duly authorized officer of their corporations and all the acts of said Attorney, pursuant to the authority hereby given is hereby ratified and confirmed.

This Power of Attorney is made and executed pursuant to and by authority of the By-Law and Resolutions, printed on the reverse hereof, duly adopted, as indicated, by the Boards of Directors of the corporations.

In Witness Whereof, the CNA Companies have caused these presents to be signed by their Senior Vice President and their corporate seals to be hereto affixed on this 30th day of January, 2007.

CONTINENTAL CASUALTY COMPANY CORPORATE SEAL 1897

NATIONAL FIRE INSURANCE COMPANY OF HARTFORD

AMERICAN CASUALTY COMPANY OF READING, PENNSYLVANIA INCORPORATED JULY 31, 1902

Continental Casualty Company
National Fire Insurance Company of Hartford
American Casualty Company of Reading, Pennsylvania

Thomas P. Stillman — Senior Vice President

State of Illinois, County of Cook, ss:
On this 30th day of January, 2007, before me personally came Thomas P. Stillman to me known, who, being by me duly sworn, did depose and say: that he resides in the City of Chicago, State of Illinois; that he is a Senior Vice President of Continental Casualty Company, an Illinois corporation, National Fire Insurance Company of Hartford, an Illinois corporation, and American Casualty Company of Reading, Pennsylvania, a Pennsylvania corporation described in and which executed the above instrument; that he knows the seals of said corporations; that the seals affixed to the said instrument are such corporate seals; that they were so affixed pursuant to authority given by the Boards of Directors of said corporations and that he signed his name thereto pursuant to like authority, and acknowledges same to be the act and deed of said corporations.

OFFICIAL SEAL
ELIZA PRICE
NOTARY PUBLIC, STATE OF ILLINOIS
MY COMMISSION EXPIRES: 09/17/09

My Commission Expires September 17, 2009

Eliza Price — Notary Public

CERTIFICATE

I, Mary A. Ribikawskis, Assistant Secretary of Continental Casualty Company, an Illinois corporation, National Fire Insurance Company of Hartford, an Illinois corporation, and American Casualty Company of Reading, Pennsylvania, a Pennsylvania corporation do hereby certify that the Power of Attorney herein above set forth is still in force, and further certify that the By-Law and Resolution of the Board of Directors of the corporations printed on the reverse hereof is still in force. In testimony whereof I have hereunto subscribed my name and affixed the seal of the said corporations this 16th day of April, 2007.

CONTINENTAL CASUALTY COMPANY CORPORATE SEAL 1897

NATIONAL FIRE INSURANCE COMPANY OF HARTFORD

AMERICAN CASUALTY COMPANY OF READING, PENNSYLVANIA INCORPORATED JULY 31, 1902

Continental Casualty Company
National Fire Insurance Company of Hartford
American Casualty Company of Reading, Pennsylvania

Mary A. Ribikawskis — Assistant Secretary

Form F3148-1-2007

Authorizing By-Laws and Resolutions

ADOPTED BY THE BOARD OF DIRECTORS OF CONTINENTAL CASUALTY COMPANY:

This Power of Attorney is made and executed pursuant to and by authority of the following By-Law duly adopted by the Board of Directors of the Company.

"Article IX—Execution of Documents

Section 3. Appointment of Attorney-in-fact. The Chairman of the Board of Directors, the President or any Executive, Senior or Group Vice President may, from time to time, appoint by written certificates attorneys-in-fact to act in behalf of the Company in the execution of policies of insurance, bonds, undertakings and other obligatory instruments of like nature. Such attorneys-in-fact, subject to the limitations set forth in their respective certificates of authority, shall have full power to bind the Company by their signature and execution of any such instruments and to attach the seal of the Company thereto. The Chairman of the Board of Directors, the President or any Executive, Senior or Group Vice President or the Board of Directors, may, at any time, revoke all power and authority previously given to any attorney-in-fact."

This Power of Attorney is signed and sealed by facsimile under and by the authority of the following Resolution adopted by the Board of Directors of the Company at a meeting duly called and held on the 17th day of February, 1993.

"Resolved, that the signature of the President or any Executive, Senior or Group Vice President and the seal of the Company may be affixed by facsimile on any power of attorney granted pursuant to Section 3 of Article IX of the By-Laws, and the signature of the Secretary or an Assistant Secretary and the seal of the Company may be affixed by facsimile to any certificate of any such power and any power or certificate bearing such facsimile signature and seal shall be valid and binding on the Company. Any such power so executed and sealed and certified by certificate so executed and sealed shall, with respect to any bond or undertaking to which it is attached, continue to be valid and binding on the Company."

ADOPTED BY THE BOARD OF DIRECTORS OF AMERICAN CASUALTY COMPANY OF READING, PENNSYLVANIA:

This Power of Attorney is made and executed pursuant to and by authority of the following By-Law duly adopted by the Board of Directors of the Company.

"Article VI—Execution of Obligations and Appointment of Attorney-in-Fact

Section 2. Appointment of Attorney-in-fact. The Chairman of the Board of Directors, the President or any Executive, Senior or Group Vice President may, from time to time, appoint by written certificates attorneys-in-fact to act in behalf of the Company in the execution of policies of insurance, bonds, undertakings and other obligatory instruments of like nature. Such attorneys-in-fact, subject to the limitations set forth in their respective certificates of authority, shall have full power to bind the Company by their signature and execution of any such instruments and to attach the seal of the Company thereto. The President or any Executive, Senior or Group Vice President may at any time revoke all power and authority previously given to any attorney-in-fact."

This Power of Attorney is signed and sealed by facsimile under and by the authority of the following Resolution adopted by the Board of Directors of the Company at a meeting duly called and held on the 17th day of February, 1993.

"Resolved, that the signature of the President or any Executive, Senior or Group Vice President and the seal of the Company may be affixed by facsimile on any power of attorney granted pursuant to Section 2 of Article VI of the By-Laws, and the signature of the Secretary or an Assistant Secretary and the seal of the Company may be affixed by facsimile to any certificate of any such power and any power or certificate bearing such facsimile signature and seal shall be valid and binding on the Company. Any such power so executed and sealed and certified by certificate so executed and sealed shall, with respect to any bond or undertaking to which it is attached, continue to be valid and binding on the Company."

ADOPTED BY THE BOARD OF DIRECTORS OF NATIONAL FIRE INSURANCE COMPANY OF HARTFORD:

This Power of Attorney is made and executed pursuant to and by authority of the following By-Law duly adopted by the Board of Directors of the Company.

"Article VII—Execution of Documents

Section 3. Appointment of Attorney-in-Fact. The Chairman of the Board of Directors, the President of any Executive or Senior Vice President may, from time to time, appoint by written certificates attorneys-in-fact to act in behalf of the Company in the execution of policies of insurance, bonds, undertakings and other obligatory instruments of like nature. Such attorneys-in-fact, subject to the limitations set forth in their respective certificates of authority shall have full power to bind the Company by their signature and execution of any such instruments and to attach the seal of the Company thereto. The Chairman of the Board of Directors, the President or any Executive, Senior Vice President or the Board of Directors, may, at any time, revoke all power and authority previously given to any attorney-in-fact."

This Power of Attorney is signed and sealed by facsimile under and by the authority of the following Resolution adopted by the Board of Directors of the Company at a meeting duly called and held on the 17th day of February, 1993.

"RESOLVED: That the signature of the President, an Executive Vice President or any Senior or Group Vice President and the seal of the Corporation may be affixed by facsimile on any power of attorney granted pursuant to the Resolution adopted by this Board of Directors on February 17, 1993 and the signature of a Secretary or an Assistant Secretary and the seal of the Corporation may be affixed by facsimile to any certificate of any such power, and any power or certificate bearing such facsimile signature and seal shall be valid and binding on the Corporation. Any such power so executed and sealed and certified by certificate so executed and sealed, shall with respect to any bond or undertaking to which it is attached, continue to be valid and binding on the Corporation."

VILLAGE OF WILLOWBROOK

STREETLIGHT MAINTENANCE SERVICES

SPECIFICATIONS

The undersigned ("Contractor") agrees to furnish to the Village of Willowbrook, an Illinois municipal corporation, hereinafter referred to as the "Village", **STREETLIGHT MAINTENANCE SERVICES** conforming to the terms and conditions set forth herein.

I. GENERAL TERMS AND CONDITIONS

A. EXAMINATION OF SITE

Bidders shall inform themselves of all the conditions under which the work is to be performed concerning the site of the work, the obstacles which may be encountered, and all other relevant matters concerning the work to be performed and the type of work required under this contract.

The Contractor to whom a contract is awarded will not be allowed any extra compensation by reason of any such matters of things concerning which the Contractor did not inform himself prior to bidding. The successful Contractor must employ, so far as reasonably possible as determined by the Village, such methods and means in the carrying out of his work as will not cause any interruption or interference with any other contractor.

B. MEETING BEFORE WORK BEGINS

If desired, the Contractor shall meet with the Director of Municipal Services or his designee(s) prior to the start of work in order to review the contract specifications, designate the appropriate project contacts, and the manner in which work will be proceeding, among other items.

C. DAMAGE TO PUBLIC OR PRIVATE PROPERTY

Any damage of public or private property caused by the Contractor's operations shall be resolved with the property owner within ten (10) days after damage occurs to the satisfaction of the Village. The Contractor shall inform the Village of any damage caused by the Contractor's operation on the day such damage occurs. Should the damage not be rectified within the time frame agreed upon or to the satisfaction of the Village, the Village reserves the right to repair or replace that which was damaged or assess the Contractor such cost as may be reasonable and related to damaged caused by the Contractor, and deduct these costs from any payment due the Contractor.

D. BASIS OF PAYMENT

The Contractor shall be paid for the work as described herein.

E. PREVAILING WAGES

In accordance with the law and the provisions of 820ILCS 130/0.01 et seq., entitled "an Act regulating wages of laborers, mechanics, and other workers employed in any public works by the state, county, city or any public body or any political subdivision or by any one under contract for public works", not less than the prevailing rate of wages shall be paid to all laborers, workmen and mechanics performing work under this contract. Prospective Bidders shall thoroughly familiarize themselves with the provisions of the above mentioned act and shall prepare any and all bids in strict compliance therewith. Copies of the prevailing rate of wages for this Village are on file in the office of the Village Clerk of the Village of Willowbrook.

F. TRESPASS ON LAND

The Contractor shall confine his operations and storage of materials and equipment to the job site public right-of-way or easements. The Contractor shall exercise extreme caution so as not to trespass upon property of third parties not involved in the contract. In the event that the Contractor is to enter upon the property of third parties in the execution of the work he shall obtain written permission prior to doing so and submit evidence of said written permission to the Village.

G. COSTS

The undersigned hereby affirms and states that the prices quoted herein constitute the total cost to the Village for all work involved in the respective items. This cost also includes all proposal preparation costs, insurance, royalties, transportation charges, use of all tools and equipment, superintendent, overhead expense, inspection costs, all profits and all other work services and conditions necessarily involved in the work to be done in accordance with the requirements of the contract documents considered severally and collectively.

H. ADDITIONAL INFORMATION

Each bidder shall be asked to provide the following data with the bid:

A statement of the items or equipment that the bidder proposes to use on the project and a statement noting which of these items of equipment the bidder owns. A separate statement is needed for those items the contractor does not own but will be able to rent or otherwise have access to use.

At least four (4) references who can attest to the bidder's ability to fulfill this contract including at least one (1) municipal, governmental, or institutional reference. Include names, addresses and phone numbers.

At least one (1) reference that can attest to the bidder's previous satisfactory performance of a municipal or other governmental street light maintenance agreement that is comparable in size to this project.

Any bidder may be required by the Village to submit additional data in support of the bidder's claim to be competent to carry out the terms and provisions of the contract.

II. STREET LIGHTING SYSTEMS

A. DESCRIPTION OF WORK:

This Contract is for the maintenance of Street Lighting Systems located in the Village of Willowbrook, DuPage County, Illinois.

The Contractor shall: (1) clean luminaries, reflectors, and glassware of street lights as listed in the Contract for the unit prices bid; and (2) furnish all labor, materials and equipment to replace burned out lamps, correct any malfunction of equipment, or affect any temporary emergency repairs to damaged equipment resulting from any cause. Labor, materials, and equipment shall be furnished at the unit prices stated in the Contractor's Proposal.

The Contractor shall not be required to patrol the street lighting systems for lamp Failures, other failures, or nonoperative equipment. However, on notification by the Owner or duly authorized representative, he shall replace burned out lamps by Friday of the week in which they were reported. Malfunction of equipment, faulty cable which results in entire or major portions of circuits being inoperative shall be corrected or temporarily repaired within 24 hours of notification. Permanent repairs shall be affected as soon thereafter as possible. Payment shall be based on the unit prices per hour for labor and equipment stated in the Contract. Materials shall be paid for at the unit prices stated in the Contract or, if not so stated, shall be paid for as described elsewhere in these Special Provisions.

B. CLEANING LUMINAIRES, REFLECTORS, AND REFRACTORS:

Location, number, and mounting height of street lights to have luminaires, reflectors, and refractors cleaned under this Proposal are as indicated in the following tabulation.

Location	Pole Top Mounted 16" Height	Bracket Mounted Over 25'
79th Street @ Blackberry Lane		1
79th Street @ Cherry Tree Lane		1
79th Street @ Sugarbush Lane		1
79th Street @ Clarendon Hills Road		1
Blackberry Lane @ Honey Locust Lane		1
Farmingdale Terrace Park		1
Blackberry Lane @ Hawthorn Lane		1
Cherry Tree Lane @ Hawthorn Lane		1
Blackberry Lane @ Apple Tree Lane		1
Apple Tree Lane @ Cul-de-Sac		1

Location	Pole Top Mounted 16" Height	Bracket Mounted Over 25'
Apple Tree Lane @ Pine Tree Lane		1
Sheridan Drive @ 75th Street		1
Sheridan Drive @ Apple Tree Lane		1
Sheridan Drive @ Blackberry Lane		1
Sheridan Drive @ Cherry Tree Lane		1
Clarendon Hills Road @ Sheridan Drive		1
Clarendon Hills Road @ Sheridan Drive to 75th Street		2
Clarendon Hills Road @ 75th Street		1
Community Park on Midway Drive		17
73rd Court @ Route 83		1
73rd Court @ Cul-de-Sac		1
72nd Court – Route 83 to Willoway Lane	5	
Adams Street – Cherrywood Lane to Plainfield Road		12
Kingswood Court @ Cul-de-Sac		1
Kingswood Road @ Plainfield Road		1
Kingswood Road @ Kingswood Court		1
Sheffield Lane – Stratford Lane to Ridgemoor Drive		2
Stratford Lane @ Kingswood Road		1
Wedgewood Lane-Somerset Road to Wedgewood Court		3
256 Somerset Road		1
Rodgers Drive @ Plainfield Road		1
Rodgers Drive @ Somerset Road		1
6607 Rodgers Drive		1
Rodgers Drive @ Rodgers Court		1
Rodgers Drive @ Ridgemoor Drive		1
Wedgewood Court @ Cul-de-Sac		1
Somerset Road @ Somerset Court		1
Somerset Court @ Cul-de-Sac		1

Location	Pole Top Mounted 16" Height	Bracket Mounted Over 25'
Chaucer Road @ Somerset Road		1
Ridgemoor Court @ Cul-de-Sac		1
Ridgemoor Drive South @ Madison Street		2
Ridgemoor Drive @ Sheffield Lane		1
Ridgemoor Drive @ Wedgewood Lane		1
Ridgemoor Drive @ Wingate Road		1
Ridgemoor Drive @ Ridgemoor Court		1
Ridgemoor Drive @ Cambridge Road		1
Rodgers Court @ Cul-de-Sac		1
Ridgemoor Drive North @ Madison		1
Ridgemoor Drive @ Lane Court	1	
427 Stonegate Court		1
Wingate Road @ Stonegate Court		1
Wingate Road @ Woodgate Court		1
432 Woodgate		1
6503 Cambridge Road		1
159 Rodgers Court		1
6545 Chaucer Road		1
Chaucer Road @ Chaucer Court		1
Chaucer Court @ Cul-de-Sac		1
Madison Street @ Waterford Court		1
Waterford Road @ Waterford Court		1
Waterford Road @ Wingate Road		1
Waterford Road @ Brentwood Lane		1
Waterford Road @ Cambridge Road		1
Waterford Road @ Meadow Lane		1
Waterford Road @ Rodgers Drive		1
Rodgers Drive @ Waterford Drive		1

Location	Pole Top Mounted 16" Height	Bracket Mounted Over 25'
Waterford Drive-Rodgers Drive to Oxford Road		1
Waterford Drive @ Oxford Road		1
Waterford Drive @ Chaucer Road		1
Waterford Drive @ Garfield Avenue		1
Garfield Avenue @ Garfield Ridge Court	1	
Garfield Ridge Court	2	
Garfield Avenue @ Ridgefield Lane		1
Ridgefield Lane	1	
Hill Road @ Tremont Road	1	
Hill Road @ Wesley Road	1	
Hill Road @ Briar Road	1	
Hill Road @ Raleigh Road	1	
Tremont Road @ Sunset Ridge Road	1	
Sunset Ridge Road @ Wesley Road	1	
Sunset Ridge Road @ Briar Road	1	
Sunset Ridge Road @ Raleigh Road	1	
6320 Raleigh Road	1	
Rodgers Farm Road @ Garfield Avenue		1
Madison Street @ Creekside Court		1
Creekside Court @ Cul-de-Sac		1
6406 Waterford Court		1
Brentwood Lane @ Hiddenbrook Lane		1
Meadow Lane @ Hiddenbrook Lane		1
Ridgemoor Drive West	1	
Squire Lane @ 63rd Street		1
Squire Lane @ Cul-de-Sac	1	
Willowood Lane @ Bentley Avenue	1	
Willowood Lane @ Cul-de-Sac	1	

Location	Pole Top Mounted 16" Height	Bracket Mounted Over 25'
Willowood Lane @ 61st Street	1	
Chatelaine Court @ Cul-de-Sac		1
Chatelaine Court @ Clarendon Hills Road		1
Clarendon Hills Road @ MacArthur Drive		1
5918 Clarendon Hills Road		1
59th Street @ Bentley Avenue		1
59th Street @ Virginia Avenue		1
59th Street @ Tennessee Avenue		1
59th Street @ Alabama Avenue		1
59th Street @ Clarendon Hills Road		1
219 59th Street		1
122 59th Street		1
59th Street @ Holmes Avenue		1
Clarendon Hills Road @ 58th Place		1
Quincy Street at Executive Drive		1
Madison Street at Executive Drive		1
Quincy Street at Midway Drive		1
Joliet Road at Quincy Street		1
Midway Drive - RT 83 to Quincy Street		6
Willow Brook Centre Parkway		12
Monroe @ 71st Street		1
Totals	24	144

C. METHOD OF CLEANING:

All cleaning of luminaires, reflectors, and refractors specified in this contract shall be accomplished in accordance with manufacturer's recommendations. Care shall be taken in the entire cleaning operation to prevent any disruption in the alignment of the luminaire.

Reflectors are finished by the patented "alzak" process, and shall be cleaned with mild soap or detergent and water, Bon Ami, or liquid wax emulsion.

Glass refractors will be washed with soap or detergent and water. After washing, the surfaces shall be rinsed and wiped dry with a soft cloth. Care shall be exercised so as not to chip or bruise glass surfaces.

Plastic refractors are more easily scratched and special care shall be used. No hard, rough cloths shall be used. Grease or oil may be removed with a mild household detergent solution. Solvents such as acetone, benzene, carbon tetrachloride, lacquer thinners, commercial window sprays, or kitchen scouring compounds shall not be allowed. After washing the refractors, they shall be given a final rinse in an anti-static solution such as "CADCO" or "ANSTAC-2-M", or equal, and allowed to air dry without wiping.

D. BASIS OF PAYMENT:

The Contractor shall be paid for the work under this section at the contract until prices per each for CLEANING LUMINAIRES, REFLECTORS, AND REFRACTORS for (1) pole top mounted unit having a mounting height of approximately sixteen feet (16'), and (2) for bracket-mounted units having a mounting height of over twenty-five feet (25'), which prices shall be payment in full for furnishing all labor, materials, equipment, tools and transportation services necessary to do the work as specified. The Owner shall pay for this work no later than sixty (60) days after receipt of a statement from the Contractor.

III. STREET LIGHTING SYSTEM MAINTENANCE

A. DECRIPTION:

Under this section, the Contractor shall furnish labor, materials, and equipment to perform the following listed services to maintain the existing "Street Lighting Systems" of the Owner. The Contractor shall be expected to perform the following repairs and replacements upon notification by the Owner. The Owner may, in its discretion, have others do all or part of the following:

1. Replace burned out lamps that are reported to the Contractor by the Owner, the same day, if possible, but in no case later than the Friday of the week in which they were reported. At the time of replacement of burned out, broken, or missing lamps, the reflectors and refractors shall be cleaned in accordance with these Specifications. All lamps replaced shall be of the same wattage as the lamps removed. Lamps of the various wattages shall be furnished by the Contractor in accordance with the Specifications included herein.

2. Realign light standards, brackets and luminiares where required.

3. Replace or make repairs to any equipment of components damaged from any cause whatsoever.

4. Replace or repair damaged or defective light poles, foundations, mast arms, luminaires, handhole covers, and any appurtenances.

B. LAMPS:

These items shall include the furnishing of mercury vapor and high pressure sodium of the sizes and types specified hereinafter in existing luminaires and at the locations directed by the Owner and/or Engineer.

The lamps shall be designed to burn in any position and shall have an approximate rated life of 24,000 hours at ten (10) hours burning time per start and shall come to rated candlepower in not over four (4) minutes after starting.

1. The 400-watt mercury vapor lamps shall provide 21,000 initial lumens.

2. The 250-watt mercury vapor lamps shall provide 12,100 initial lumens.

3. The 175-watt mercury vapor lamps shall provide 8,600 initial lumens.

4. The 400-watt high pressure sodium lamps shall provide 50,000 initial lumens.

5. The 250-watt high pressure sodium lamps shall provide 27,500 initial lumens.

6. The 150-watt high pressure sodium lamps shall provide 16,000 initial lumens.

7. The 100-watt high pressure sodium lamps shall provide 9,500 initial lumens.

8. The 55-watt high pressure sodium lamps shall provide 4,000 initial lumens.

The Contractor shall specify the manufacture or make of the lamps he proposes to furnish in the space provided in the "Schedule of Prices" of the Proposal.

C. METHOD OF COMPUTING TIME:

Rates for labor and equipment furnished by the Contractor shall be based on the time the man and equipment leave the shop or leave another job and for the actual time engaged in the work. If the work, as ordered by the Owner, does not take a full day, the time for returning to the shop shall be included in the total time figured for payment. However, if the labor and equipment moves to another job, the time moving to the other job shall not be included. The time the Contractor spends in moving from one location to another location on this project will be included.

D. BASIS OF PAYMENT:

Payment for "Street Lighting System Maintenance" shall be paid for as follows:

1. Labor: For skilled and unskilled labor, the Contractor will be paid the Contract Unit price per hour computed as outlines in "Method of Computing Time" above, and as set forth in the "Proposal" section, "Schedule of Prices", which rates shall include:

(1) Compensation Insurance, (2) Liability Insurance, (3) Federal and State Unemployment tax, (4) Federal Old Age Annuity Tax, (5) Health and Welfare Trust Fund, (6) Vacation fund, (7) Over head and (8) Profit. If it is necessary for the Contractor to employ the services of any other class of skilled, semi-skilled, or unskilled, other than those listed in the "Schedule of Prices", the Contractor shall receive the current local rate of wage for each hour that said labor or foreman are actually engaged in such work computed as outlines under "Method of Computing Time" above mentioned, to which cost shall be added fifteen percent (15%) of the sum thereof. The Contractor may also receive the net cost of: (1) Compensation Insurance, (2) Liability Insurance, (3) Federal and State Unemployment Tax, (4) Federal Old Age Annuity Tax, (5) Health and Welfare Trust Funds and (6) Vacation Fund.

2. Materials: For mercury vapor and high pressure sodium lamps used in the maintenance of "Street Lighting Systems", the Contractor will be paid the Contract unit price per each for "400 WATT MERCURY VAPOR LAMPS"; "250 WATT MERCURY VAPOR LAMPS"; "175 WATT MERCURY VAPOR LAMPS"; "400 WATT HIGH PRESSURE SODIUM LAMPS"; "250 WATT HIGH PRESSURE SODIUM LAMPS'; "150 WATT HIGH PRESSURE SODIUM LAMPS"; "100 WATT HIGH PRESSURE SODIUM LAMPS"; and "55 WATT HIGH PRESSURE SODIUM LAMPS' as set forth in the "Schedule Of Prices", included herein.

   Should materials or parts other than lamps as specified above be required to effect repairs or replacements to the "Street Lighting Systems", the Contractor shall furnish such parts and will receive the actual cost of the materials and parts, to which a maximum of fifteen percent (15%) shall be added.

3. Equipment: For the equipment listed in the "Schedule of Prices" the Contractor will receive the hourly equipment rental rate for the actual number of hours the equipment is used on the work, computed as outlines herein, at the Contract unit price per hour for "SERVICE TRUCK" and "TOWER AND BUCKET TRUCK", which hourly rates shall include depreciation, insurance repairs, and operating costs.

   If it is necessary for the Contractor to use equipment not included in the "Schedule of Prices", the Contractor shall receive a reasonable ownership expense cost, computed in accordance with the current "Schedule of Average Annual Equipment Ownership Expense with Operating cost", as approved and adopted by the Illinois Department of Transportation, and subsequent revisions and addictions for the period that said machinery and equipment is in use on the work, to which no percent will be added. Operating costs of such equipment will be paid for at the cost computed as outlined herein. Prior to the use of any unlisted equipment, the Contractor shall establish ownership and operating costs of the equipment and submit them to the Owner for approval.

4. Payment: The Owner shall pay for labor, materials, or equipment furnished for "Street Lighting System Maintenance" within sixty (60) days after receipt of a statement from the Contractor.

VILLAGE OF WILLOWBROOK

STREETLIGHT MAINTENANCE SERVICES PROPOSAL

The undersigned "Contractor" offers to provide to the Village of Willowbrook, an Illinois Municipal Corporation, Streetlight Maintenance Services conforming to the specifications attached hereto, with such exceptions or modifications as herewith set forth, and in accordance with the terms and conditions herein specified.

Schedule of Prices

RETURN WITH PROPOSAL

(For complete information covering these items, see specifications)

Item No.	Items	Unit	Quantity	Unit Price	Total
1	CLEAN LUMINAIRES, REFLECTORS AND REFRACTORS FOR POLE TOP MOUNTED UNITS; HEIGHT 16'	EA	24	10.00	240.00
2	CLEAN LUMINAIRES, REFLECTORS AND REFRACTORS FOR BRACKET MOUNTED UNITS; HEIGHT 25'	EA	144	4.00	720.00
3	400 WATT MERCURY VAPOR LAMPS	EA	1	8.00	8.00
4	400 WATT HIGH PRESSURE SODIUM LAMPS	EA	16	8.00	128.00
5	250 WALL MERCURY VAPOR LAMPS	EA	13	8.00	104.00
6	250 WALL HIGH PRESSURE SODIUM LAMPS	EA	45	8.00	360.00
7	175 WALL MERCURY VAPOR LAMPS	EA	73	8.00	584.00
8	150 WALL HIGH PRESSURE SODIUM LAMPS	EA	19	8.00	152.00
9	100 WATT HIGH PRESSURE SODIUM LAMPS	EA	1	9.00	9.00
10	55 WATT HIGH PRESSURE SODIUM LAMPS	EA	3	9.00	27.00
11	ELECTRICIAN	HR	50	77.00	3,850.00
12	ELECTRICIAN'S HELPER	HR	40	55.00	2,200.00
13	SERVICE TRUCK	HR	50	15.00	750.00
14	TOWER AND BUCKET TRUCK	HR	30	28.00	840.00
	*MANUFACTURER OF LAMPS TO BE GENERAL ELECTRIC				
				TOTAL:	$9,972.00

Licensed Electrical Contractor: Meade Electric Company, Inc.

Name

C27763

Number

Address: 9550 W. 55th Street, Suite A

McCook, IL 60525

Phone: 708-588-2500 Date: April 16, 2007

Signature: Mel K. H

Subscribed and sworn before me on this 16th day of April, 2007

MY COMMISSION EXPIRES:

May 15, 2010

Joan T. Maselli

NOTARY PUBLIC

"OFFICIAL SEAL"
JOAN T. MASELLI
Notary Public, State of Illinois
My Commission Expires 05/15/10

ADDITIONAL BID INFORMATION

Please check the appropriate column

A.	Statement of the Items / Equipment the Bidder Proposes to use to complete the work:	Owned By the Vendor	Rented or Other Access to by the Vendor
	Over 700 licensed vehicles.	X	

REFERENCE LIST

(please make additional copies of this sheet if needed)

Village/City: DuPage County Division of Transportation

Contact: Dave Ziesmer, Traffic Engineer **Phone:** 630-407-6893

Type & Date of Work: Traffic Signal / Street Light Maintenance 2005-2008

Village/City: Kane County Division of Transportation

Contact: Tom Szabo, Traffic Engineer **Phone:** 630-208-3139

Type & Date of Work: Traffic Signal / Street Light Maintenance 2005-2008

Village/City: City of Naperville

Contact: Andy Hynes, Traffic Engineer **Phone:** 630-548-2958

Type & Date of Work: Traffic Signal Maintenance

Village/City: Village of OakBrook

Contact: Mike Meranda, Public Works Director **Phone:** 630-368-5272

Type & Date of Work: Traffic Signal Maintenance 2004-2007

EXHIBIT "B"

MEADE®
ELECTRIC COMPANY, INC.

9550 W. 55th Street • Suite A • McCook, IL 60525 • (708) 588-2500

RECEIVED
APR - 9 2008
VILLAGE OF WILLOWBROOK
MUNICIPAL SERVICES DEPT.

April 4, 2008

Village of Willowbrook
7760 Quincy Street
Willowbrook, IL. 60527-5594

Attention: Tim Halik – Director of Municipal Services

Reference: 2007 Street Light Maintenance Contract
1st Year Extension (May 1, 2008 thru April 30, 2009)

Dear Tim,

This letter is in reference to your e-mail dated March 18, 2008 regarding the extension of the current Street Light Maintenance Contract that Meade Electric Company, Inc. has with the Village of Willowbrook.

Meade Electric Company, Inc. is willing to accept an extension of our existing Street Light Maintenance Contract with the Village of Willowbrook for an additional year at the same unit prices. This contract will be in force from 12:01 A.M. May 1, 2008 to 12:00 midnight April 30, 2009.

We appreciate the opportunity to serve the people of Willowbrook.

Sincerely,
Meade Electric Company, Inc.

Thomas W. Talbot

Thomas W. Talbot
Project Manager

cc: file

EXHIBIT "B"

MEADE®
ELECTRIC COMPANY, INC.

9550 W. 55th Street • Suite A • McCook, IL 60525 • (708) 588-2500

March 27, 2009

Village of Willowbrook
7760 Quincy Street
Willowbrook, IL. 60527-5594

Attention: Tim Halik – Director of Municipal Services

Reference: Street Light Maintenance Contract (FY 09/10)
New 1 Year Contract (May 1, 2009 through April 30, 2010)

Dear Tim,

This letter is in reference to your e-mail dated March 11, 2009 regarding the extension of a new 1 Year Street Light Maintenance Contract that Meade Electric Company, Inc. has with the Village of Willowbrook.

Meade Electric Company, Inc. is willing to accept an a one (1) extension of a Street Light Maintenance Contract with the Village of Willowbrook for an additional year at the same unit prices. This contract will be in force from 12:01 A.M. May 1, 2009 to 12:00 midnight April 30, 2010.

We appreciate the opportunity to serve the people of Willowbrook.

Sincerely,
Meade Electric Company, Inc.

Thomas W. Talbot

Thomas W. Talbot
Project Manager

RECEIVED
APR – 6 2009
VILLAGE OF WILLOWBROOK
BUILDING & ZONING DIVISION

cc: file

EXHIBIT "B"

MEADE
SAFETY • QUALITY • PERFORMANCE • SINCE 1908 ®

9550 W. 55th Street • Suite A • McCook, IL 60525 • 708-588-2500 • 708-588-2501 Fax

March 29, 2010

Village of Willowbrook
7760 Quincy Street
Willowbrook, IL. 60527-5594

Attention: Tim Halik – Director of Municipal Services

Reference: Street Light Maintenance Contract (FY 10/11)
1 Year Extension (May 1, 2010 through April 30, 2011)

Dear Tim,

This letter is in reference to your e-mail dated March 25, 2010 regarding the extension of a new 1 Year Street Light Maintenance Contract that Meade Electric Company, Inc. has with the Village of Willowbrook.

Meade Electric Company, Inc. is willing to accept a one (1) year extension of the Street Light Maintenance Contract with the Village of Willowbrook at the same unit prices. This contract will be in force from 12:01 A.M. May 1, 2010 to 12:00 midnight April 30, 2011.

We appreciate the opportunity to serve the people of Willowbrook.

Sincerely,
Meade Electric Company, Inc.

Thomas W. Talbot

Thomas W. Talbot
Project Manager

RECEIVED
MAR 30 2010
VILLAGE OF WILLOWBROOK
MUNICIPAL SERVICES DEPT.

cc: file

VILLAGE OF WILLOWBROOK

BOARD MEETING

AGENDA ITEM - HISTORY/COMMENTARY

ITEM TITLE: MOTION – BOARD ADVICE AND CONSENT TO PRESIDENT'S APPOINTMENT OF ROBERT A. NOVELLE, JR. TO FILL A VACANCY IN THE OFFICE OF VILLAGE ETHICS OFFICER

AGENDA NO. 10

AGENDA DATE: 4/12/2010

STAFF REVIEW: SIGNATURE: _____

LEGAL REVIEW: N/A SIGNATURE: _____

RECOMMENDED BY VILLAGE ADMIN.: SIGNATURE: _____

REVIEWED & APPROVED BY COMMITTEE: YES ☐ NO ☐ N/A ☒

ITEM HISTORY (PREVIOUS VILLAGE BOARD REVIEWS, ACTIONS RELATED TO THIS ITEM, OTHER PERTINENT HISTORY)

In 1992, the Village of Willowbrook adopted certain provisions of the State Officials and Employees Ethic Act which is outlined under Section 1-12-3.2 of the Village Code. Section 1-12-3.2(I) creates the office of Ethics Officer, who is appointed by the Village President. The responsibility of the Ethics Officer is to provide guidance to the officers and employees of the Village concerning the interpretation of and compliance with the provisions of this section of the Code and State Ethics laws.

ITEM COMMENTARY (BACKGROUND, DISCUSSION, KEY POINTS, RECOMMENDATIONS, ETC.)

The position of theVillage Ethics Officer became vacant when Katherine Paterno submitted her resignation effective immediately. Ms. Paterno served as the Ethics Officer since March 2008. The Village President recommends the appointment of Robert A. Novelle, Jr. to the position of Ethics Officer for the Village of Willowbrook. Mr. Novelle's resume is attached.

ACTION PROPOSED: A motion to concur with the Village President's recommendation to appoint Robert A. Novelle, Jr. to serve as the Village's Ethics Officer.

Robert Allen Novelle, Jr.

212 Somerset Road, Willowbrook, IL 60527

630.323.3864

Robert.Novelle@Comcast.net

Education

The John Marshall Law School
Juris Doctorate
January 1994

Loyola University, Chicago, IL
Bachelor of Science – Criminal Justice
January 1991

Licensing

- *Accepted to Illinois Bar – May 1994*
- *Accepted to Federal Bar, Northern District of Illinois – June 1994*
- *Accepted to Federal Bar, Western District of Wisconsin – April 2003*

Professional Experience

NOVELLE LAW ASSOCIATES, L.L.C. Westchester, IL
Managing Member, Attorney at Law — January 2006 - present

- Responsible for all areas of law practice, including managing office and all of its employees
- Responsible for handling full case load specializing in Personal Injury Case, Criminal Cases, Real Estate Transactions and Adoptions
- Created entire firm from its inception

ELLEVON REAL ESTATE BROKERAGE CORPORATION
Managing Member, Licensed Broker — October 2005- present

- Responsible for all areas of Real Estate Transactions, including managing office and all of its employees
- Responsible for handling all listing, negotiations, contracts and sales
- Created entire Corporation from its inception

METROPOLITAN PIER AND EXPOSITION AUTHORITY
Board Member — 2008- 2010

- Responsible for overseeing the management of all of the affairs of McCormick Place and Navy Pier
- Member of sub-committee to run all aspect of Navy Pier
- Member of Sub-Committee to oversee compliance with Affirmative Action requirements in all aspects the Authority

SERPICO, NOVELLE, PETROSINO & RASCIA, LTD.
Partner/ Attorney — 1994-2005

- Responsible for handling full case load specializing in Personal Injury Case, Criminal Cases, Real Estate Transactions and Adoptions
- Assisted other Attorneys with Court calls in all areas of the law
- Hired, trained, and supervised numerous law clerk
- Responsible for management of Law Library and purchasing and running of computer and phones systems

COOK COUNTY STATE'S ATTORNEY'S OFFICE
Appeals Division — 1992-1993

- Hired under Federal grant to Assist State's Attorney's in the writing of drug related appeals
- Researched, prepared, responded to and filed appeals regarding drug related cases

Family

Married to Renee Turano-Novelle in 1994, and parent of four children, two of which are adopted and two of which were born through the use of a Surrogate mother

REFERENCES AVAILABLE UPON REQUEST

VILLAGE OF WILLOWBROOK

BOARD MEETING

AGENDA ITEM - HISTORY/COMMENTARY

ITEM TITLE: MOTION – BOARD ADVICE AND CONSENT TO PRESIDENT'S REAPPOINTMENT OF STEPHEN LANDSMAN TO THE OFFICE OF MEMBER OF THE VILLAGE BOARD OF POLICE COMMISSIONERS

AGENDA NO. 11

AGENDA DATE: 4/12/2010

STAFF REVIEW: **SIGNATURE:**

LEGAL REVIEW: N/A **SIGNATURE:**

RECOMMENDED BY VILLAGE ADMIN.: **SIGNATURE:**

REVIEWED & APPROVED BY COMMITTEE: YES ☐ NO ☐ N/A ☒

ITEM HISTORY (PREVIOUS VILLAGE BOARD REVIEWS, ACTIONS RELATED TO THIS ITEM, OTHER PERTINENT HISTORY)

The Village President has the authority to appoint volunteer members to the various Boards and Commissions that report to the President and Board of Trustees. This evening, the Village President will recommend a reappointment to the Board of Police Commissioners.

ITEM COMMENTARY (BACKGROUND, DISCUSSION, KEY POINTS, RECOMMENDATIONS, ETC.)

The Village President recommends the reappointment of Stephen Landsman to the Board of Police Commissioners for a two-year term to expire on April 30, 2012. Mr. Landsman has served as a member of the Board of Police Commissioners since January 2008. There is no resume attached.

ACTION PROPOSED: A motion to concur with the Village President's recommendation to reappoint Stephen Landsman to the Village Board of Police Commissioners.

VILLAGE OF WILLOWBROOK

BOARD MEETING

AGENDA ITEM - HISTORY/COMMENTARY

ITEM TITLE: MOTION – BOARD ADVICE AND CONSENT TO PRESIDENT'S APPOINTMENT OF JOSEPH HEERY TO FILL A VACANCY IN THE OFFICE OF MEMBER OF THE VILLAGE BOARD OF POLICE COMMISSIONERS

AGENDA NO. 12

AGENDA DATE: 4/12/2010

STAFF REVIEW: SIGNATURE: _____

LEGAL REVIEW: N/A SIGNATURE: _____

RECOMMENDED BY VILLAGE ADMIN.: SIGNATURE: _____

REVIEWED & APPROVED BY COMMITTEE: YES ☐ NO ☐ N/A ☒

ITEM HISTORY (PREVIOUS VILLAGE BOARD REVIEWS, ACTIONS RELATED TO THIS ITEM, OTHER PERTINENT HISTORY)

The Village President has the authority to appoint volunteer members to the various Boards and Commissions that report to the President and Board of Trustees. This evening, the Village President will recommend the appointment of a new member of the Board of Police Commissioners.

ITEM COMMENTARY (BACKGROUND, DISCUSSION, KEY POINTS, RECOMMENDATIONS, ETC.)

There currently is a vacant position on the Board of Police Commissioners created by the resignation of Robert Buhrke in June 2009. The Village President recommends the appointment of Joseph Heery to serve as a member of the Board of Police Commissioners for the remainder of the Mr. Buhrke's term which expires in April 2012. Mr. Heery has served as a member of the Plan Commission since October 2001. Mr. Heery's resume is attached.

ACTION PROPOSED: A motion to concur with the Village President's recommendation to appoint Joseph Heery to the Village Board of Police Commissioners.

JOSEPH E. HEERY

556 Ridgemoor Dr.
Willowbrook, Illinois 60521
Business: (312) 256-2699
Residence: (630) 654-2699
Cell (630) 460-2409
Jehwb@yahoo.com

SUMMARY

PROFESSIONAL EXPERIENCE

4ACCESS COMMUNICATIONS COMPANY, Chicago, Illinois **2002- Present**
A privately held company that produces point-of-transaction systems, funded entirely by private investors. Responsible for the entire financial and human resources operation of the Company. The CFO of the Company since inception reporting to the President and CEO.

JH & ASSOCIATES **2000 – 2002**
Business advisor to companies ranging from start-ups to mid-sized.
Industries included internet-related, health care, back office operations, technology and others.

CYBORG SYSTEMS, INC., Chicago, Illinois **1989 – 2000**
A privately held, human resource software application company with worldwide headquarters in Chicago, Illinois and operations in Canada, the UK, South Africa and Singapore.
Vice President & CFO
Reporting to the Chairman & CEO

CHAMPION PARTS REBUILDERS, INC, Oak Brook, Illinois **1971 – 1989**
A publicly held company that remanufactures carburetors, water pumps, clutches and electrical products for both the automotive and heavy-duty marketplace, with revenue of approximately $100 million.

Controller (1984 – 1989)
Reporting to the CFO. Managed the accounting department.

Accounting Manager/Accountant (1971 – 1984)

TOUCHE ROSS & CO., Chicago, Illinois **1968 – 1971**
Touche Ross & Co. was one of the Big 8 (now Big 4) accounting firms.

Senior Auditor, Chicago, Illinois
Audited public, privately-held and non-profit entities

EDUCATION/PROFESSIONAL DEVELOPMENT

Master of Accounting Science, University of Illinois, Champaign, Illinois, 1968

BSBA, John Carroll University, Cleveland, Ohio, 1967

CPA State of Illinois

COMMUNITY

Commissioner, Willowbrook, IL. Plan Commission, 2004-Present

Board member, Hinsdale Township High School, 1983-89

PERSONAL

Resident of Willowbrook since 1998

VILLAGE OF WILLOWBROOK

BOARD MEETING
AGENDA ITEM - HISTORY/COMMENTARY

ITEM TITLE:

A RESOLUTION AWARDING THE FISCAL YEAR 2010-11 MOTOR FUEL TAX ROADWAY MAINTENANCE PROGRAM CONTRACT TO JAMES D. FIALA PAVING COMPANY, INC. IN THE AMOUNT OF $191,689.00

AGENDA NO. 13

AGENDA DATE: 04/12/10

STAFF REVIEW: Tim Halik, Director of Municipal Services **SIGNATURE:** Tim Halik

LEGAL REVIEW: N/A **SIGNATURE:** _____

RECOMMENDED BY VILLAGE ADMIN.: **SIGNATURE:** Meg E. Pinn

REVIEWED & APPROVED BY COMMITTEE: **YES** ☒ on 03/01/10 **NO** ☐ **N/A** ☐

ITEM HISTORY (PREVIOUS VILLAGE BOARD REVIEWS, ACTIONS RELATED TO THIS ITEM, PERTINENT HISTORY)

This season's Roadway Maintenance Program will include full-depth patching, partial milling, resurfacing, and re-striping of 1.91 miles of roadway located in the general northwest quadrant of town. This road work is in addition to the reconstruction project of Clarendon Hills Road between 75th Street and 79th Street, which was recently awarded by IDOT as an ARRA stimulus funded project.

Since the funding for this work will come from the Village Motor Fuel Tax (MFT) Fund, the construction bid documents were required to be submitted to the Illinois Department of Transportation (IDOT) for approval prior to going out to public bid. Once IDOT reviewed and approved the bid document, the project was put out to bid. The public bid opening was held at the Village Hall on Monday, April 5, 2010 at 11:00 AM.

VENDOR	BID AMOUNT
Engineer's Estimate	*$221,050.00*
James D. Fiala Paving Co., Inc.	**$191,689.00**
Crowley Sheppard Asphalt, Inc.	$209,045.00
K-Five Construction Corp.	$214,006.00
Central Blacktop Co., Inc.	$218,457.50
Chicagoland Paving Contractors, Inc.	$220,010.00
Brothers Asphalt Paving, Inc.	$228,240.00
Schroeder Asphalt Services, Inc.	$229,468.50
RW Dunteman Company	$261,818.50

James D. Fiala Paving Co., Inc. is an IDOT pre-qualified bidder. They have performed work in the Village in the past. The company is well qualified to complete our roadway maintenance program this year.

STAFF RECOMMENDATION:

Staff would recommend that the attached resolution authorizing the Village President and Village Clerk to award the contract for the 2010 MFT Roadway Maintenance Program to James D. Fiala Paving Co., Inc. in the amount of $191,689.00 be adopted. Once the Village Board awards the contract, the contract will then be sent to IDOT for final approval. Once IDOT approves the contract, the Village can issue a Notice to Proceed to the contractor, and the work will begin. Staff anticipates that the work would start in mid-May.

RESOLUTION NO. 10-R-_____

A RESOLUTION AWARDING THE FISCAL YEAR 2010-11 MOTOR FUEL TAX ROADWAY MAINTENANCE PROGRAM CONTRACT TO JAMES D. FIALA PAVING COMPANY, INC. IN THE AMOUNT OF $191,689.00

BE IT RESOLVED by the President and Board of Trustees of the Village of Willowbrook, DuPage County, Illinois, to accept the low bid received from James D. Fiala Paving Company, Inc. in the amount of $191,689.00 for the Village of Willowbrook's Fiscal Year 2010-11 Motor Fuel Tax Roadway Maintenance Program and that the Village President and Village Clerk be authorized to sign the appropriate documents authorizing this work in the amount of $191,689.00.

ADOPTED and APPROVED this 12th day of April, 2010

APPROVED:

_____
Village President

ATTEST:

_____
Village Clerk

ROLL CALL VOTE: AYES: _____

NAYS: _____

ABSTENTIONS: _____

ABSENT: _____

CHRISTOPHER B. BURKE ENGINEERING, LTD.
9575 West Higgins Road Suite 600 Rosemont, Illinois 60018 TEL (847) 823-0500 FAX(847) 823-0520

April 6, 2010

Village of Willowbrook
7760 Quincy Street
Willowbrook, Illinois 60527

Attention: Tim Halik

Subject: 2010 MFT Program
(CBBEL Project No. 90-144 H114)

Dear Tim:

On April 5, 2010, you and I opened sealed proposals for the 2010 MFT Program at the Village Hall. As you know, the project includes partial milling, patching, resurfacing, and striping. Eight bids were received at the bid opening.

Engineer's Opinion of Cost	$221,050.00
James D. Fiala Paving Co. Inc.	$191,689.00
Crowley Sheppard Asphalt, Inc.	$209,045.00
K-Five Construction Corp.	$214,006.00
Central Blacktop Co. Inc.	$218,457.50
Chicagoland Paving Contractors Inc.	$220,010.00
Brothers Asphalt Paving, Inc.	$228,240.00
Schroeder Asphalt Services, Inc.	$229,468.50
RW Dunteman Company	$261,818.50

The bid from James D. Fiala Paving is below the estimate and appears to be complete and correct. Therefore, we recommend that the contract be awarded to them.

A detailed bid summary is attached.

If you have any questions or would like to further discuss this letter, please do not hesitate to contact me.

Sincerely,

Daniel L. Lynch, PE, CFM
Head, Municipal Engineering Department

Attachment

DLL/jmc
N:\WILLOWBROOK\90144H114\ADMIN\L1.040610.docx

RECEIVED
APR - 6 2010
VILLAGE OF WILLOWBROOK
MUNICIPAL SERVICES DEPT.

2010 Willowbrook MFT
Bid Opening April 5, 2010 at Willowbrook Village Hall 11:00 AM
CBBEL Project No. 90-144H114
Prepared April 6, 2010

ITEM NO.	ITEM	QUANTITY	UNIT	UNIT PRICE	ENGINEER'S ESTIMATE	UNIT PRICE	FIALA	UNIT PRICE	CROWLEY-SHEPPARD	UNIT PRICE	K-FIVE	UNIT PRICE	CENTRAL BLACKTOP	UNIT PRICE	CHICAGOLAND	UNIT PRICE	BROTHERS	UNIT PRICE	SCHROEDER	UNIT PRICE	DUNTEMAN
40600100	BITUMINOUS MATERIALS (PRIME COAT)	2400	GAL	$ 1.00	$ 2,400.00	$ 0.01	$ 24.00	$ 1.25	$ 3,000.00	$ 0.01	$ 24.00	$ 1.85	$ 4,440.00	$ 1.50	$ 3,600.00	$ 0.10	$ 240.00	$ 0.01	$ 24.00	$ 0.10	$ 240.00
40603335	HOT-MIX ASPHALT SURFACE COURSE MIX D, N50	2190	TON	$ 70.00	$ 153,300.00	$ 64.00	$ 140,160.00	$ 68.00	$ 148,920.00	$ 68.00	$ 148,920.00	$ 69.00	$ 151,110.00	$ 74.00	$ 162,060.00	$ 80.00	$ 175,200.00	$ 75.25	$ 164,797.50	$ 78.25	$ 171,367.50
44000155	HOT-MIX ASPHALT SURFACE REMOVAL, 1 1/2" (PARTIAL WIDTH)	14100	SY	$ 2.00	$ 28,200.00	$ 1.75	$ 24,675.00	$ 1.85	$ 26,085.00	$ 2.50	$ 35,250.00	$ 1.65	$ 23,265.00	$ 1.70	$ 23,970.00	$ 2.00	$ 28,200.00	$ 2.10	$ 29,610.00	$ 3.75	$ 52,875.00
78000650	THERMOPLASTIC PAVEMENT MARKING LINE 24"	165	FT	$ 10.00	$ 1,650.00	$ 12.00	$ 1,980.00	$ 16.00	$ 2,640.00	$ 12.00	$ 1,980.00	$ 16.50	$ 2,722.50	$ 12.00	$ 1,980.00	$ 20.00	$ 3,300.00	$ 5.80	$ 957.00	$ 15.00	$ 2,475.00
*N/A	CLASS D PATCHES BINDER SPECIAL, 6"	710	SY	$ 50.00	$ 35,500.00	$ 35.00	$ 24,850.00	$ 40.00	$ 28,400.00	$ 39.20	$ 27,832.00	$ 52.00	$ 36,920.00	$ 40.00	$ 28,400.00	$ 30.00	$ 21,300.00	$ 48.00	$ 34,080.00	$ 49.10	$ 34,861.00
GRAND TOTAL					$ 221,050.00		$ 191,689.00		$ 209,045.00		$ 214,006.00		$ 218,457.50		$ 220,010.00		$ 228,240.00		$ 229,468.50		$ 261,618.50

Illinois Department of Transportation

Proposal / Contract Cover

PROPOSAL SUBMITTED BY		
Contractor's Name		
Street		P.O. Box
City	State	Zip Code

STATE OF ILLINOIS

COUNTY OF DUPAGE

WILLOWBROOK
(Name of City, Village, Town or Road District)

- ☐ ESTIMATE OF COST
- ☒ SPECIFICATIONS
- ☒ PLANS
- ☐ MATERIAL PROPOSAL
- ☐ DELIVER AND INSTALL PROPOSAL
- ☒ CONTRACT PROPOSAL
- ☐ CONTRACT
- ☐ CONTRACT BOND

DANIEL L. LYNCH 62-0917 REGISTERED PROFESSIONAL ENGINEER OF ILLINOIS

Exp Nov '11

FOR THE IMPROVEMENT OF

STREET NAME OR ROUTE NO. VARIOUS

SECTION NO. 10-00000-02-GM

TYPES OF FUNDS MFT

For Municipal Projects

Submitted
Approved/Passed March 8, 2010
Date

Robert A. Napoli

☐ Mayor ☒ President of Board of Trustees ☐ Municipal Official

For County and Road District Projects

Submitted/Approved _____
Date

☐ Highway Commissioner

Submitted/Approved _____
Date

☐ County Engineer/Superintendent of Highways

Department of Transportation

☒ Released for bid based on limited review

Date MAR 23 2010

Diane M. O'Keefe /MS
Regional Engineer

☐ Concurrence in approval of award

Date _____

Regional Engineer

Illinois Department of Transportation

Notice to Bidders

RETURN WITH BID

Route	VARIOUS
County	DUPAGE
Local Agency	WILLOWBROOK
Section	10-00000-GM-02

Time and Place of Opening of Bids

Sealed proposals for the improvement described below will be received at the office of The Village Clerk of The Village of Willowbrook, 7760 Qunicy Street, Willowbrook, IL 60527 (address) until 11 o'clock A M., April 5, 2010 (date) Proposals will be opened and read publicly at 11 o'clock A M., April 5, 2010 (date) at the office of The Village Clerk of The Village of Willowbrook, 7760 Qunicy Street, Willowbrook, IL 60527 (address)

Description of Work

Name 2010 Road Project Length 10,100 feet (1.91 miles)

Location Village of Willowbrook on the following streets: Western Ave, Bentley Ave, 65th St, 61st St, and 60th Ct.

Proposed Improvement Hot-Mix Asphalt surface removal, Hot-Mix Asphalt surface course, Class D patching, and striping.

Bidders Instructions

1. Plans and proposal forms will be available in the office of Willowbrook Village Hall

   7760 Quincy Street, Willowbrook, IL 60527, FOR A NON-REFUNDABLE FEE OF $30.00 PAYABLE TO THE VILLAGE OF WILLOWBROOK Contact: Tim Halik (630) 630.920.2261

2. If prequalification is required , the 2 low bidders must file within 24 hours after the letting an "Affidavit of Availability" (Form BC 57), in triplicate, showing all uncompleted contracts awarded to them and all low bids pending award for Federal, State, County, Municipal and private work. One copy shall be filed with the Awarding Authority and 2 copies with the IDOT District Office.
3. All proposals must be accompanied by a proposal guaranty as provided in BLRS Special Provision for Bidding Requirements and Conditions for Contract Proposals contained in the "Supplemental Specifications and Recurring Special Provisions".
4. The Awarding Authority reserves the right to waive technicalities and to reject any or all proposals as provided in BLRS Special Provision for Bidding Requirements and Conditions for Contract Proposals contained in the "Supplemental Specifications and Recurring Special Provisions".
5. Bidders need not return the entire contract proposal when bids are submitted unless otherwise required. Portions of the proposal that must be returned include the following:
   a. BLR 12210 - Contract Cover
   b. BLR 12220 - Notice to Bidders
   c. BLR 12221 - Contract Proposal
   d. BLR 12222 - Contract Schedule of Prices
   e. BLR 12223 - Signatures
   f. BLR 12230 - Proposal Bid Bond (if applicable)
   g. BLR 12325 – Apprenticeship or Training Program Certification **(do not use for federally funded projects)**
6. The quantities appearing in the bid schedule are approximate and are prepared for the comparison of bids. Payment to the Contractor will be made only for the actual quantities of work performed and accepted or materials furnished according to the contract. The scheduled quantities of work to be done and materials to be furnished may be increased, decreased or omitted as hereinafter provided.

7. Submission of a bid shall be conclusive assurance and warranty the bidder has examined the plans and understands all requirements for the performance of work. The bidder will be responsible for all errors in the proposal resulting from failure or neglect to conduct an in depth examination. The Awarding Authority will, in no case be responsible for any costs, expenses, losses or changes in anticipated profits resulting from such failure or neglect of the bidder.
8. The bidder shall take no advantage of any error or omission in the proposal and advertised contract.
9. If a special envelope is supplied by the Awarding Authority, each proposal should be submitted in that envelope furnished by the Awarding Agency and the blank spaces on the envelope shall be filled in correctly to clearly indicate its contents. When an envelope other than the special one furnished by the Awarding Authority is used, it shall be marked to clearly indicate its contents. When sent by mail, the sealed proposal shall be addressed to the Awarding Authority at the address and in care of the official in whose office the bids are to be received. All proposals shall be filed prior to the time and at the place specified in the Notice to Bidders. Proposals received after the time specified will be returned to the bidder unopened.
10. Permission will be given to a bidder to withdraw a proposal if the bidder makes the request in writing or in person before the time for opening proposals.

By Order of

Village of Willowbrook	Leroy Hansen
(Awarding Authority)	County Engineer/County Superintendent of Highways/Municipal Clerk

Note: All proposal documents, including Proposal Guaranty Checks or Proposal Bid Bonds, should be stapled together to prevent loss when bids are processed.

Illinois Department of Transportation

Apprenticeship or Training Program Certification

Return with Bid

Route	Various
County	DuPage
Local Agency	Willowbrook
Section	10-00000-GM-02

All contractors are required to complete the following certification:

☒ For this contract proposal or for all groups in this deliver and install proposal.

☐ For the following deliver and install groups in this material proposal:

_____

_____

_____

_____

Illinois Department of Transportation policy, adopted in accordance with the provisions of the Illinois Highway Code, requires this contract to be awarded to the lowest responsive and responsible bidder. The award decision is subject to approval by the Department. In addition to all other responsibility factors, this contract or deliver and install proposal requires all bidders and all bidders' subcontractors to disclose participation in apprenticeship or training programs that are (1) approved by and registered with the United States Department of Labor's Bureau of Apprenticeship and Training, and (2) applicable to the work of the above indicated proposals or groups. Therefore, all bidders are required to complete the following certification:

I. Except as provided in paragraph IV below, the undersigned bidder certifies that it is a participant, either as an individual or as part of a group program, in an approved apprenticeship or training program applicable to each type of work or craft that the bidder will perform with its own employees.

II. The undersigned bidder further certifies for work to be performed by subcontract that each of its subcontractors submitted for approval either (A) is, at the time of such bid, participating in an approved, applicable apprenticeship or training program; or (B) will, prior to commencement of performance of work pursuant to this contract, establish participation in an approved apprenticeship or training program applicable to the work of the subcontract.

III. The undersigned bidder, by inclusion in the list in the space below, certifies the official name of each program sponsor holding the Certificate of Registration for all of the types of work or crafts in which the bidder is a participant and that will be performed with the bidder's employees. Types of work or craft that will be subcontracted shall be included and listed as subcontract work. The list shall also indicate any type of work or craft job category for which there is no applicable apprenticeship or training program available.

_____

_____

_____

_____

_____

IV. Except for any work identified above, any bidder or subcontractor that shall perform all or part of the work of the contract or deliver and install proposal solely by individual owners, partners or members and not by employees to whom the payment of prevailing rates of wages would be required, check the following box, and identify the owner/operator workforce and positions of ownership. ☐

_____

_____

_____

_____

_____

The requirements of this certification and disclosure are a material part of the contract, and the contractor shall require this certification provision to be included in all approved subcontracts. The bidder is responsible for making a complete report and shall make certain that each type of work or craft job category that will be utilized on the project is accounted for and listed. The Department at any time before or after award may require the production of a copy of each applicable Certificate of Registration issued by the United States Department of Labor evidencing such participation by the contractor and any or all of its subcontractors. In order to fulfill the participation requirement, it shall not be necessary that any applicable program sponsor be currently taking or that it will take applications for apprenticeship, training or employment during the performance of the work of this contract or deliver and install proposal.

Bidder: _____ By: _____
(Signature)

Address: _____ Title: _____

INDEX
FOR
SUPPLEMENTAL SPECIFICATIONS
AND RECURRING SPECIAL PROVISIONS

Adopted January 1, 2010

This index contains a listing of SUPPLEMENTAL SPECIFICATIONS and frequently used RECURRING SPECIAL PROVISIONS.

ERRATA Standard Specifications for Road and Bridge Construction (Adopted 1-1-07) (Revised 1-1-10)

SUPPLEMENTAL SPECIFICATIONS

Std. Spec. Sec.		Page No.
201	Clearing, Tree Removal and Protection	1
205	Embankment	2
251	Mulch	3
253	Planting Woody Plants	4
280	Temporary Erosion Control	6
406	Hot-Mix Asphalt Binder and Surface Course	7
443	Reflective Crack Control Treatment	12
502	Excavation for Structures	15
503	Concrete Structures	16
504	Precast Concrete Structures	17
505	Steel Structures	18
540	Box Culverts	19
581	Waterproofing Membrane System	20
630	Steel Plate Beam Guardrail	21
633	Removing and Reerecting Guardrail and Terminals	22
637	Concrete Barrier	23
669	Removal and Disposal of Regulated Substances	24
672	Sealing Abandoned Water Wells	25
701	Work Zone Traffic Control and Protection	26
720	Sign Panels and Appurtenances	27
721	Sign Panel Overlay	28
722	Demountable Sign Legend Characters and Arrows	29
726	Mile Post Marker Assembly	30
733	Overhead Sign Structures	31
783	Pavement Marking and Marker Removal	32
801	Electrical Requirements	33
805	Electrical Service Installation – Traffic Signals	34
836	Pole Foundation	35
838	Breakaway Devices	36
862	Uninterruptable Power Supply	37
873	Electric Cable	39
878	Traffic Signal Concrete Foundation	41
1003	Fine Aggregates	42
1004	Coarse Aggregates	43
1005	Stone and Broken Concrete	44
1006	Metals	45
1008	Structural Steel Coatings	47
1010	Finely Divided Materials	48
1020	Portland Cement Concrete	49
1022	Concrete Curing Materials	58
1024	Nonshrink Grout	59
1030	Hot-Mix Asphalt	60
1032	Bituminous Materials	65
1042	Precast Concrete Products	68
1062	Reflective Crack Control System	70
1069	Pole and Tower	72
1074	Control Equipment	75

1076 Wire and Cable 80
1080 Fabric Materials 81
1081 Materials for Planting 82
1083 Elastomeric Bearings 84
1090 Sign Base 85
1091 Sign Face 87
1092 Sign Legend and Supplemental Panels 95
1093 Sign Supports 96
1094 Overhead Sign Structures 98
1095 Pavement Markings 104
1101 General Equipment 106
1102 Hot-Mix Asphalt Equipment 107
1103 Portland Cement Concrete Equipment 109
1106 Work Zone Traffic Control Devices 110

RECURRING SPECIAL PROVISIONS

The following RECURRING SPECIAL PROVISIONS indicated by an "X" are applicable to this contract and are included by reference:

CHECK SHEET # NO.		PAGE
1	Additional State Requirements For Federal-Aid Construction Contracts (Eff. 2-1-69) (Rev. 1-1-10)	111
2	Subletting of Contracts (Federal-Aid Contracts) (Eff. 1-1-88) (Rev. 5-1-93)	114
3	EEO (Eff. 7-21-78) (Rev. 11-18-80)	115
4	Specific Equal Employment Opportunity Responsibilities Non Federal-Aid Contracts (Eff. 3-20-69) (Rev. 1-1-94)	125
5	Required Provisions - State Contracts (Eff. 4-1-65) (Rev. 1-1-10)	130
6	Reserved	135
7	Reserved	136
8	Haul Road Stream Crossings, Other Temporary Stream Crossings, and In-Stream Work Pads (Eff. 1-2-92) (Rev. 1-1-98)	137
9	Construction Layout Stakes Except for Bridges (Eff. 1-1-99) (Rev. 1-1-07)	138
10	Construction Layout Stakes (Eff. 5-1-93) (Rev. 1-1-07)	141
11	Use of Geotextile Fabric for Railroad Crossing (Eff. 1-1-95) (Rev. 1-1-07)	144
12	Subsealing of Concrete Pavements (Eff. 11-1-84) (Rev. 1-1-07)	146
13	Hot-Mix Asphalt Surface Correction (Eff. 11-1-87) (Rev. 1-1-09)	150
14	Pavement and Shoulder Resurfacing (Eff. 2-1-00) (Rev. 1-1-09)	152
15	PCC Partial Depth Hot-Mix Asphalt Patching (Eff. 1-1-98) (Rev. 1-1-07)	153
16	Patching with Hot-Mix Asphalt Overlay Removal (Eff. 10-1-95) (Rev. 1-1-07)	155
17	Polymer Concrete (Eff. 8-1-95) (Rev. 1-1-08)	156
18	PVC Pipeliner (Eff. 4-1-04) (Rev. 1-1-07)	158
19	Pipe Underdrains (Eff. 9-9-87) (Rev. 1-1-07)	159
20	Guardrail and Barrier Wall Delineation (Eff. 12-15-93) (Rev. 1-1-97)	160
21	Bicycle Racks (Eff. 4-1-94) (Rev. 1-1-07)	164
22	Temporary Modular Glare Screen System (Eff. 1-1-00) (Rev. 1-1-07)	166
23	Temporary Portable Bridge Traffic Signals (Eff. 8-1-03) (Rev. 1-1-07)	168
24	Work Zone Public Information Signs (Eff. 9-1-02) (Rev. 1-1-07)	170
25	Night Time Inspection of Roadway Lighting (Eff. 5-1-96)	171
26	English Substitution of Metric Bolts (Eff. 7-1-96)	172
27	English Substitution of Metric Reinforcement Bars (Eff. 4-1-96) (Rev. 1-1-03)	173
28	Calcium Chloride Accelerator for Portland Cement Concrete (Eff. 1-1-01)	174
29	Reserved	175
30	Quality Control of Concrete Mixtures at the Plant (Eff. 8-1-00) (Rev. 1-1-09)	176
31	Quality Control/Quality Assurance of Concrete Mixtures (Eff. 4-1-92) (Rev. 1-1-09)	184
32	Asbestos Bearing Pad Removal (Eff. 11-1-03)	196
33	Asbestos Hot-Mix Asphalt Surface Removal (Eff. 6-1-89) (Rev. 1-1-09)	197

CHECK SHEET
FOR
RECURRING SPECIAL PROVISIONS

Adopted January 1, 2010

The following RECURRING SPECIAL PROVISIONS indicated by an "X" are applicable to this contract and are included by reference:

RECURRING SPECIAL PROVISIONS

CHECK SHEET #			PAGE NO.
1	☐	Additional State Requirements for Federal-aid Construction Contracts (Eff. 2-1-69) (Rev. 1-1-10)	111
2	☐	Subletting of Contracts (Federal Aid Contracts) (Eff. 1-1-88) (Rev. 5-1-93)	114
3	☐	EEO (Eff. 7-21-78) (Rev. 11-18-80)	115
4	☐	Specific Equal Employment Opportunity Responsibilities Non Federal-aid Contracts (Eff. 3-20-69) (Rev. 1-1-94)	125
5	☐	Required Provisions - State Contracts (Eff. 4-1-65) (Rev. 1-1-10)	130
6		**Reserved**	135
7		**Reserved**	136
8	☐	Haul Road Stream Crossings, Other Temporary Stream Crossings, and In-Stream Work Pads (Eff. 1-2-92) (Rev. 1-1-98)	137
9	☐	Construction Layout Stakes Except for Bridges* (Eff. 1-1-99) (Rev. 1-1-09)	138
10	☐	Construction Layout Stakes (Eff. 5-1-93) (Rev. 1-1-07)	141
11	☐	Use of Geotextile Fabric for Railroad Crossing (Eff. 1-1-95) (Rev. 1-1-07)	144
12	☐	Subsealing of Concrete Pavements (Eff. 11-1-84) (Rev. 1-1-07)	146
13	☐	Hot-Mix Asphalt Surface Removal (Cold Milling) (Eff. 11-1-87) (Rev. 1-1-09)	150
14	☐	Pavement and Shoulder Resurfacing (Eff. 2-1-02) (Rev. 1-1-09)	152
15	☐	PCC Partial Depth Hot-Mix Asphalt Patching (Eff. 1-1-98) (Rev. 1-1-07)	153
16	☐	Patching with Hot-Mix Asphalt Overlay Removal (Eff. 10-1-95) (Rev. 1-1-07)	155
17	☐	Polymer Concrete (Eff. 8-1-95) (Rev. 1-1-08)	156
18	☐	PVC Pipeliner (Eff. 4-1-04) (Rev. 1-1-07)	158
19	☐	Pipe Underdrains (Eff. 9-9-87) (Rev. 1-1-07)	159
20	☐	Guardrail and Barrier Wall Delineation (Eff. 12-15-93) (Rev. 1-1-97)	160
21	☐	Bicycle Racks (Eff. 4-1-94) (Rev. 1-1-07)	164
22	☐	Temporary Modular Glare Screen System (Eff. 1-1-00) (Rev. 1-1-07)	166
23	☐	Temporary Portable Bridge Traffic Signals (Eff. 8-1-03) (Rev. 1-1-07)	168
24	☐	Work Zone Public Information Signs (Eff. 9-1-02) (Rev. 1-1-07)	170
25	☐	Night Time Inspection of Roadway Lighting (Eff. 5-1-96)	171
26	☐	English Substitution of Metric Bolts (Eff. 7-1-96)	172
27	☐	English Substitution of Metric Reinforcement Bars (Eff. 4-1-96) (Rev. 1-1-03)	173
28	☐	Calcium Chloride Accelerator for Portland Cement Concrete (Eff. 1-1-01)	174
29		**Reserved**	175
30	☐	QC of Concrete Mixtures at the Plant (Eff. 8-1-00) (Rev. 1-1-09)	176
31	☐	Quality Control/Quality Assurance of Concrete Mixtures (Eff. 4-1-92) (Rev. 1-1-09)	184
32	☐	Asbestos Bearing Pad Removal (Eff. 11-1-03)	196
33	☐	Asbestos Hot-Mix Asphalt Surface Removal (Eff. 6-1-89) (Rev. 1-1-09)	197

CHECK SHEET
FOR
RECURRING LOCAL ROADS AND STREETS SPECIAL PROVISIONS

Adopted January 1, 2010

The following RECURRING LOCAL ROADS AND STREETS SPECIAL PROVISIONS indicated by an "X" are applicable to this contract and are included by reference:

RECURRING LOCAL ROADS AND STREETS SPECIAL PROVISIONS

CHECK SHEET #			PAGE NO.
LRS 1		**Reserved**	199
LRS 2	☐	Furnished Excavation (Eff. 1-1-99) (Rev. 1-1-07)	200
LRS 3	☒	Work Zone Traffic Control (Eff. 1-1-99) (Rev. 1-1-10)	201
LRS 4	☒	Flaggers in Work Zones (Eff. 1-1-99) (Rev. 1-1-07)	202
LRS 5	☒	Contract Claims (Eff. 1-1-02) (Rev. 1-1-07)	203
LRS 6	☒	Bidding Requirements and Conditions for Contract Proposals (Eff. 1-1-02)	204
LRS 7	☐	Bidding Requirements and Conditions for Material Proposals (Eff. 1-1-02) (Rev. 1-1-03)	210
LRS 8	☐	Failure to Complete the Work on Time (Eff. 1-1-99)	216
LRS 9	☐	Bituminous Surface Treatments (Eff. 1-1-99)	217
LRS 10		**Reserved**	218
LRS 11	☒	Employment Practices (Eff. 1-1-99)	219
LRS 12	☒	Wages of Employees on Public Works (Eff. 1-1-99) (Rev. 1-1-10)	221
LRS 13	☐	Selection of Labor (Eff. 1-1-99)	222
LRS 14	☐	Paving Brick and Concrete Paver Pavements and Sidewalks (Eff. 1-1-04) (Rev. 1-1-09)	223
LRS 15	☒	Partial Payments (Eff. 1-1-07)	226

Illinois Department of Transportation

Special Provisions

The following Special Provisions supplement the "Standard Specifications for Road and Bridge Construction", Adopted January 1, 2010, the latest edition of the "Manual on Uniform Traffic Control Devices for Streets and Highways", and the "Manual of Test Procedures of Materials" in effect on the date of invitation of bids, and the Supplemental Specifications and Recurring Special Provisions indicated on the Check Sheet included here in which apply to and govern the construction of Section No. 10-00000-GM-02,Village of Willowbrook, Western Av, Bentley Av, 65th St, 61st St, 60th Ct, and DuPage County and in case of conflict with any part, or parts, of said Specifications, the said Special Provisions shall take precedence and shall govern.

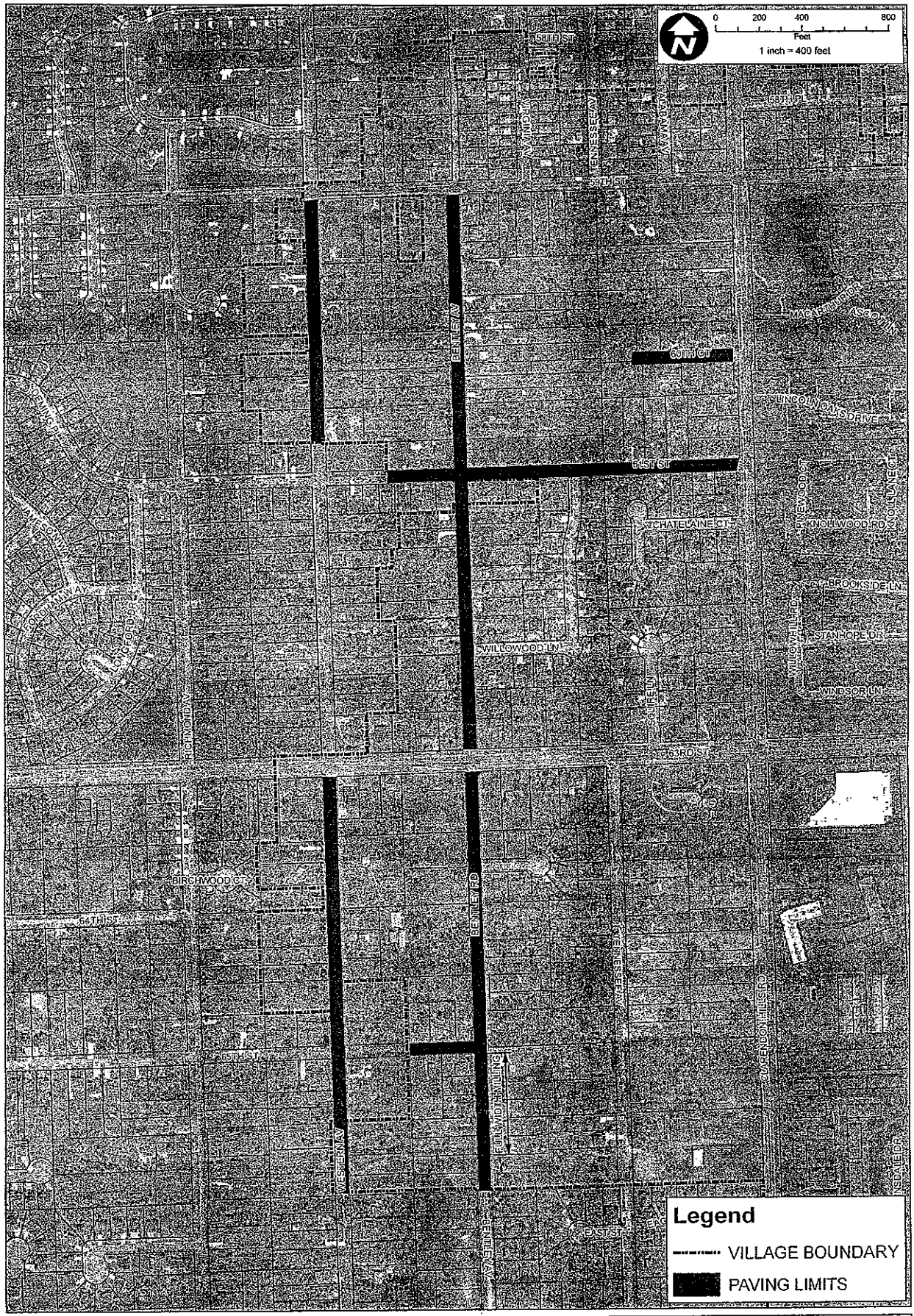

CLIENT:	TITLE:	PROJ. NO. 90144H114
VILLAGE OF WILLOWBROOK	**PAVING LIMITS**	DATE: 02-12-2010
		SHEET 1 OF 1
		DRAWING NO. **EXH**

CHRISTOPHER B. BURKE ENGINEERING, LTD.
9575 W. Higgins Road, Suite 600 · Rosemont, Illinois 60018 · (847) 823-0500

DSGN.			SCALE:	1"=400'
DWN.			GIS USER	MHAYES
CHKD.			PLOT DATE	
FILE:				

Map Document: (N:\WILLOWBROOK\90144H114\paving limits.mxd)
2/15/2010 -- 11:25:55 AM

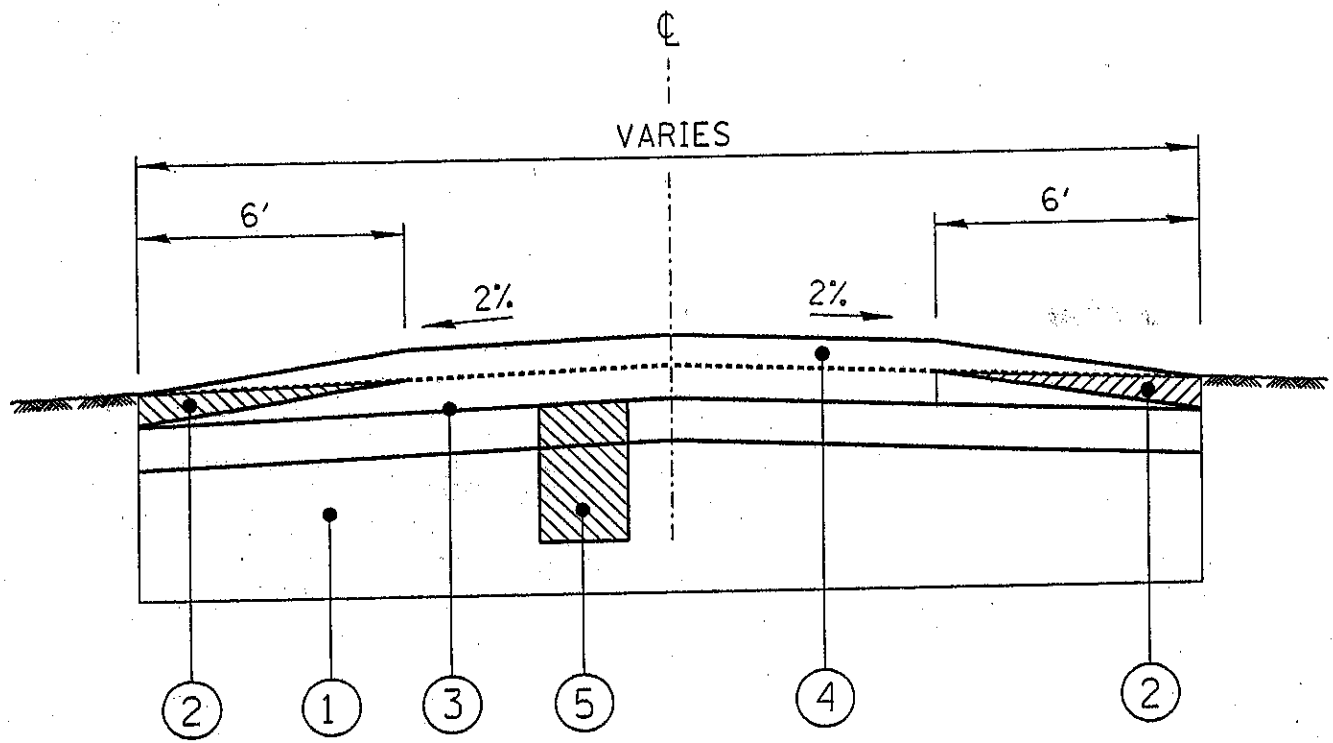

EXISTING AND PROPOSED CROSS SECTION

WESTERN AVENUE, BENTLEY AVENUE
61st STREET, 60th COURT, AND 65th STREET

1. EXISTING AGGREGATE BASE
2. MILL 1 1/2" OF EXISTING HOT MIX ASPHALT SURFACE (EDGE MILLING)
3. BITUMINOUS MATERIALS (PRIME) @ 0.10 GALLONS/SY
4. PROPOSED HOT MIX ASPHALT SURFACE COURSE, MIX "D" N50 (1 1/2")
5. PROPOSED CLASS D PATCH, BINDER SPECIAL, 6" (AS DIRECTED BY ENGINEER)

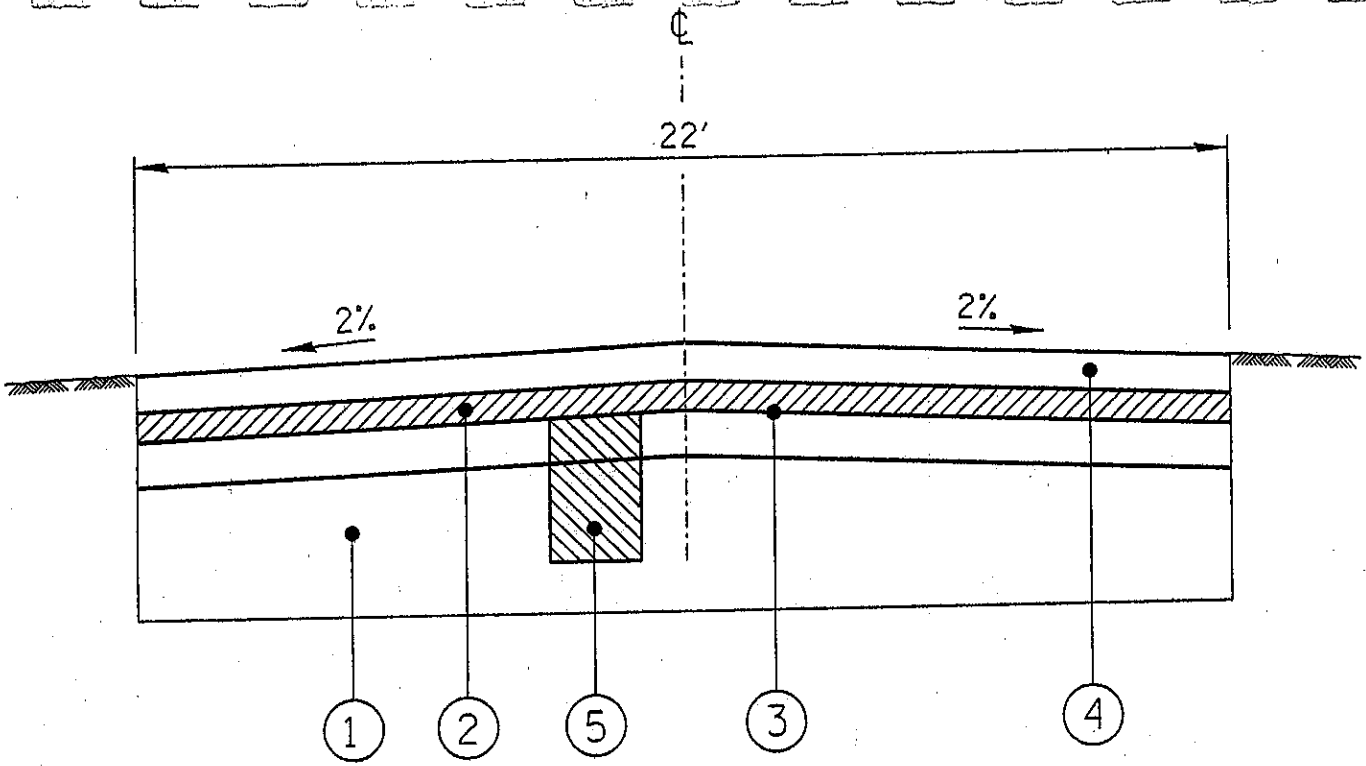

EXISTING AND PROPOSED CROSS SECTION
BENTLEY AVENUE – (ONE SECTION ONLY)

1. EXISTING AGGREGATE BASE
2. MILL 1 1/2" OF EXISTING HOT MIX ASPHALT SURFACE (FULL WIDTH)
3. BITUMINOUS MATERIALS (PRIME) @ 0.10 GALLONS/SY
4. PROPOSED HOT MIX ASPHALT SURFACE COURSE, MIX "D" N50 (1 1/2")
5. PROPOSED CLASS D PATCH, BINDER SPECIAL, 6" (AS DIRECTED BY ENGINEER)

TABLE OF CONTENTS

Location of Project 1
Description of Project 1
Examination of Plans, Specification, Special Provisions, and Site of Work 1
Contract Execution 1
Edge of Pavement 1
Sign and Mailbox Relocate 1
Limits of Construction (Paving Operations) 1
Maintenance of Roadways 2
Public Convenience and Safety 3
Miscellaneous Saw-Cutting 3
Disposal of Debris and Excavated or Removed Materials 4
Traffic Control 4
Prevailing Wage 4
Quality Control 4
Truck Weights 4
Notification of Public Utilities 5
Notification of Police and Fire Departments 5
Compliance with Codes 5
Butt Joints 5
Insurance Requirements 5
Vandalism 5
Street Cleaning 6
Class D Patches, Binder Special 6" 6
Hot-Mix Asphalt Surface Removal, 1 ½" (Partial Width) 7
Temporary Ramps 7
Restoration of Work Area 8
Pavement Striping 8
Hot-Mix Asphalt Mix Design 8
IDOT – District 1 Special Provisions 9-19

LOCATION OF PROJECT

This improvement is located on the following roads in the Village of Willowbrook, Du Page County Illinois: Western Ave, Bentley Ave, 65th St, 61st St, and 60th Ct. Total length is approximately 10,100 feet.

Road	Start	End
Western Avenue	59th St	Just N. of 61st St
Western Avenue	63rd St	S. of 65th St. to South Limits
Bentley Avenue	59th Street	S. of 65th St to South Limits
65th Street	Bentley Ave	Approx. 300' W. of Bentley
61st Street	Clarendon Hills Road	West Limits (W. Of Bentley)
60th Court	Clarendon Hills Road	Cul –de sac

DESCRIPTION OF PROJECT

This contract includes the hot-mix asphalt (HMA) resurfacing of the above mentioned streets. Included in this project are HMA surface removal, HMA surface course, Class D patching, and striping.

EXAMINATION OF PLANS, SPECIFICATION, SPECIAL PROVISIONS, AND SITE OF WORK

The prospective bidder shall, before submitting a bid, carefully examine the provisions of the contract. The bidder shall inspect in detail the site of the proposed work, investigate and become familiar with all the local conditions affecting the contract and fully acquaint themselves with the detailed requirements of construction.

EDGE OF PAVEMENT

During paving operations care will be taken to maintain a uniform edge of pavement parallel to the roadway center line. Excess material placed will be removed at the engineer's direction during or after completion of paving operations.

SIGN AND MAILBOX RELOCATE

The CONTRACTOR may remove and replace all street signs and mailboxes located in or near the construction zone. The CONTRACTOR shall be responsible for replacing at his expense any signs or mailboxes damaged during the course of construction and the operation of removing and replacing any signs or mailboxes. The removal and replacement of all existing signs and mailboxes within the construction limits shall not be paid for separately but shall be incidental to the contract.

LIMITS OF CONSTRUCTION (PAVING OPERATIONS)

The Village Engineer shall mark the limits of paving operations. This includes all removal and resurfacing limits at the start / end of the project and at side street radii, etc.

MAINTENANCE OF ROADWAYS

Beginning on the date that the CONTRACTOR begins work on this project, he shall assume responsibility for normal maintenance of all existing roadways within the limits of the improvement. This normal maintenance shall include all repair work deemed necessary by the VILLAGE, but shall not include snow removal operations. Traffic control and protection for this work will be provided by the CONTRACTOR as required by the VILLAGE.

The work involved in maintaining the existing pavement will not be paid for separately at the contract unit prices for the various items of work involved, unless otherwise specified elsewhere in these Special Provisions. Traffic control and protection will be paid for as stated in the contract. No construction activity shall begin until all proper signs and barricades have been installed. There shall be no equipment or material storage on the pavement, temporary or otherwise. All driveways must have access each night except during driveway apron removal and replacement process. In the event a driveway is not open at the end of the workday, $500 per incident will be deducted from monies due to the contractor.

The CONTRACTOR shall not prime coat any streets overnight. In the event the CONTRACTOR does prime coat a street the night before paving, a $1,000.00 per incident will be deducted from monies due to the CONTRACTOR.

No garbage shall be disposed of by the CONTRACTOR on the project site. In the event the CONTRACTOR does dispose of garbage on the project site a $500.00 per incident will be deducted from monies due to the CONTRACTOR.

If items of work have not been provided for in the contract, or otherwise specified for payment, such items, including the accompanying traffic control and protection, and detour route required by the VILLAGE, will be paid for in accordance with Article 109.04 of the STANDARD SPECIFICATIONS.

In the event the CONTRACTOR leaves the aggregate base course exposed commencing on the third night following the start of pavement removal, a $5,000 per night per street will be deducted from monies due to the CONTRACTOR. A time extension may be granted by the engineer for unforeseen weather conditions that occur prior to the start of liquidated damages.

PUBLIC CONVENIENCE AND SAFETY

In addition to the requirements of Article 107.09 of the STANDARD SPECIFICATIONS, the CONTRACTOR shall maintain entrances and side roads along the proposed improvement; interference with traffic movements and inconvenience to owners of abutting property and public shall be kept to a minimum. Any delays or inconveniences caused by the CONTRACTOR by complying with these requirements shall be considered as incidental to the contract, and no additional compensation will be allowed.

The CONTRACTOR is to plan his work so that there will be no open holes in the pavement and that all barricades will be removed from the pavement during non-work hours.

During all construction operations, the CONTRACTOR will be required to provide, erect and maintain proper signage and barricades plus provide flagmen as necessary for safe traffic control.

All provisions relating to traffic control, signage, barricades, detour route and the use of flagmen shall be subject to the approval of the VILLAGE.

The CONTRACTOR will not be allowed to close any street to through travel without the prior approval of the VILLAGE. The CONTRACTOR will be required to provide all warning signs, barricades, traffic cones, flagmen and other appurtenances to guarantee the safety of motorists and pedestrians during construction. This work will not be paid for separately but shall be considered as incidental to the Contract and no extra compensation will be allowed.

MISCELLANEOUS SAW-CUTTING

Whenever the new work will meet existing conditions other than lawn areas, regardless of whether it is asphalt or concrete, the existing adjacent pavement or curb shall be saw-cut to provide a neat joint. The saw-cut shall be in a straight line sufficiently deep so that it renders a smooth vertical face to match to. All saw cutting shall be considered incidental to the cost to the adjacent items of new work.

If the contractor is not careful or does not saw deep enough and the cut line breaks out or chips to an imperfect edge, then the existing side must be re-cut square and done over until it is correct. Any additional quantity of new work required as a result of additional removal caused by improper saw cutting will not be paid for.

DISPOSAL OF DEBRIS AND EXCAVATED OR REMOVED MATERIALS

The Contractor shall be responsible for removal and disposal of all waste material, asphalt, concrete, stone, dirt, or debris generated in the course of the work.

The contractor shall load the removed pieces of curb and gutter, sidewalk, driveway and street pavements, etc., directly onto trucks, haul it away, and dispose of it. The temporary storing of excavated materials on the parkways, and rehandling them later for disposal will not be allowed due to additional damage caused to tree root systems, parkways, existing equipment, and conditions. It shall be the contractor's responsibility to find an approved dumpsite for debris and any excavated materials. The Village will not provide for one. The stockpiling of excavated or backfill material within the roadway overnight shall not be permitted.

TRAFFIC CONTROL

The Contractor shall obtain, erect, maintain, and remove all signs, barricades, flagman, and other traffic control devices as may be necessary for the purpose of regulating, warning, or guiding traffic. Placement and maintenance of all traffic control devices shall be as directed by the Engineer and in accordance with the applicable parts of Article 107.14 of Standard Specifications and the Illinois Manual on Uniform Traffic Control Devices for Streets and Highways. All traffic protection will be considered incidental to the cost of the Contract and will not be paid for separately.

PREVAILING WAGE

Pursuant to the Illinois Prevailing Wage Act (820 ILCS 130/.01 *et seq.*) (the "Act"), the Contractor is required to comply with and notify all subcontractors for this Work that they are required to comply with all provisions of the Act, including (i) all requirements for payment of the current general prevailing rate of hourly wages and fringe benefits, for each craft or type of worker or mechanic needed to perform such Work, and also the current general prevailing rate for legal holiday and overtime work, as ascertained by the Illinois Department of Labor for DuPage County, Illinois; and (ii) all record keeping requirements under the Act. The foregoing applies only to projects that are a fixed public work.

QUALITY CONTROL

The Village of Willowbrook will collect tickets for all material utilized on the project on a daily basis or as directed by the Engineer.

TRUCK WEIGHTS

The Village may require the contractor to reweigh any trucks to verify the ticket weight at any time during the job at a certified scale. All truckloads shall be within the tolerable limits of the scales and shall be legal.

NOTIFICATION OF PUBLIC UTILITIES

The Contractor shall notify ComEd, Nicor Gas, and AT&T at JULIE 800-892-0123, and the Village Engineer of the Village of Willowbrook 847-823-0500, at least two (2) working days in advance of commencement of construction for locations of their underground lines.

NOTIFICATION OF POLICE AND FIRE DEPARTMENTS

The Contractor shall advise the Police and Fire Departments daily as to what streets will be under construction and what streets, if any, are to be closed so that they can reroute their emergency vehicles.

COMPLIANCE WITH CODES

It is the responsibility of the Contractor to whom this Contract is awarded to familiarize himself and comply with the contents of the Occupational Safety and Health Act (OSHA), codes and ordinances adopted by and in effect by Federal, State, County, Township, and Village Governmental Bodies, and any other governmental agencies at any level having jurisdiction over this area and this type of work. Any additional costs resulting from compliance with these codes shall be considered incidental to the Contract.

BUTT JOINTS

Butt joints shall be constructed the entire width of the road and at all paved driveways at a finished longitudinal slope of less than 2.5% (1V: 40H). In the opinion of the engineer, the butt joint shall provide a smooth transition between existing pavement and the improved surface. The contractor's work shall conform to section **406.18 Butt Joints** of the Standard Specifications for Road and Bridge Construction. This item shall not be paid for separately, but is incidental to the contract unit price per square yard for HMA Surface Course Removal, 1 ½".

INSURANCE REQUIREMENTS

The Contractor shall follow Section 107 of the Illinois Department of Transportation Standard Specifications for Road and Bridge Construction. With the exception of the workers compensation and employer liability policies, all insurance shall name the Village of Willowbrook, Downer Grove Township Road District and Christopher B. Burke Engineering, Ltd. as additional insureds and shall include an endorsement providing that such insurance is primary and non-contributory with respect to the additional insureds.

VANDALISM

Special attention is called to Article 107.30 of the STANDARD SPECIFICATIONS. Any defaced work shall be corrected or replaced by the CONTRACTOR at his sole expense prior to final payment. The VILLAGE shall cooperate with the CONTRACTOR to minimize vandalism, but the CONTRACTOR shall be ultimately responsible to correct any damage.

STREET CLEANING

If the CONTRACTOR fails to clean the pavement, sidewalk or parkways on or adjacent to the section under construction to the satisfaction of the ENGINEER at any time during the contract, the ENGINEER will notify the CONTRACTOR at which time the CONTRACTOR will have 24 hours to respond.

If the CONTRACTOR fails to respond within 24 hours an amount of $500.00 per incident will be deducted from any monies due the CONTRACTOR.

CLASS D PATCHES, BINDER SPECIAL, 6"

This work shall consist of removal and replacement of existing pavement at locations as directed by the Engineer. This work shall be done in accordance with Section 442 of the Standard Specifications except that the four types, namely Type 1, Type II, Type III and Type IV have been combined under the pay item CLASS D PATCHES, BINDER SPECIAL, 6"

The existing pavement including the base and Hot–Mix Asphalt surface shall be saw cut and removed to a depth of six (6) inches and replaced with 6 inches of Hot–Mix Asphalt Binder Course, IL-19, N50, as specified in Section 406. The surface of the patch shall meet the surface of the existing Hot–Mix Asphalt surface.

All holes, soft places and other defects in the subbase or subgrade shall be corrected by the Contractor by removing the unsuitable material, adding more Hot–Mix Asphalt mixture as specified herein in conformance with Section 406.

This work will be paid for at the contract unit price per SQUARE YARD (SY) for CLASS D PATCHES, BINDER, SPECIAL, 6" which price shall include the removal of the existing pavement base and Hot–Mix Asphalt surface and sub-grade as directed by the engineer and the placement and compaction of the specified Hot–Mix Asphalt mixture up to the surface of the existing Hot–Mix Asphalt surface.

Use	Mixture	Aggregates Allowed
HMA High ESAL	D Surface IL-12.5 or IL-9.5	Crushed Gravel Crushed Stone (other than Limestone) Crushed Sandstone Crushed Slag (ACBF) Crushed Steel Slag (except when used as leveling binder) Limestone may be used in Mixture D if blended by volume in the following coarse aggregate percentages: Up to 25% Limestone with at least 75% Dolomite. Up to 50% Limestone with at least 50% any aggregate listed for Mixture D except Dolomite. Up to 75% Limestone with at least 25% Crushed Slag (ACBF) or Crushed Sandstone.
HMA High ESAL	E Surface IL-12.5 or IL-9.5	Crushed Gravel Crushed Stone (other than Limestone and Dolomite) Crushed Sandstone No Limestone. Dolomite may be used in Mixture E if blended by volume in the following coarse aggregate percentages: Up to 75% Dolomite with at least 25% Crushed Sandstone, Crushed Slag (ACBF), or Crushed Steel Slag. When Crushed Slag (ACBF) or Crushed Steel Slag are used in the blend, the blend shall contain a minimum of 25% to a maximum of 75% of either Slag by volume. Up to 50% Dolomite with at least 50% of any aggregate listed for Mixture E. If required to meet design criteria, Crushed Gravel or Crushed Stone (other than Limestone or Dolomite) may be blended by volume in the following coarse aggregate percentages: Up to 75% Crushed Gravel or Crushed Stone (other than Limestone or Dolomite) with at least 25% Crushed Sandstone, Crushed Slag (ACBF), or Crushed Steel Slag. When Crushed Slag (ACBF) or Crushed Steel Slag are used in the blend, the blend shall contain a minimum of 25% to a maximum of 50% of either Slag by volume.

Use	Mixture	Aggregates Allowed
HMA High ESAL	F Surface IL-12.5 or IL-9.5	Crushed Sandstone No Limestone. Crushed Gravel, Crushed Concrete, or Crushed Dolomite may be used in Mixture F if blended by volume in the following coarse aggregate percentages: Up to 50% Crushed Gravel, Crushed Concrete or Crushed Dolomite with at least 50% Crushed Sandstone, Crushed Slag (ACBF), Crushed Steel Slag, or any Other Crushed Stone (to include Granite, Diabase, Rhyolite or Quartzite). When Crushed Slag (ACBF) or Crushed Steel Slag are used in the blend, the blend shall contain a minimum of 50% to a maximum of 75% of either Slag by volume.

(b) Quality. For surface courses and binder courses when used as surface course, the coarse aggregate shall be Class B quality or better. For Class A (seal or cover coat), other binder courses, and surface course IL-9.5L (Low ESAL), the coarse aggregate shall be Class C quality or better. For All Other courses, the coarse aggregate shall be Class D quality or better.

(c) Gradation. The coarse aggregate gradations shall be as listed in the following table.

Use	Size/Application	Gradation No.
Class A-1, 2, & 3	3/8 in. (10 mm) Seal	CA 16
Class A-1	1/2 in. (13 mm) Seal	CA 15
Class A-2 & 3	Cover	CA 14
HMA High ESAL	IL-25.0 IL-19.0 IL-12.5 IL-9.5	CA 7 1/ or CA 8 1/ CA 11 1/ CA 16 and/or CA 13 CA 16
HMA Low ESAL	IL-19.0L IL-9.5L	CA 11 1/ CA 16
HMA All Other	Stabilized Subbase or Shoulders	CA 6 2/, CA 10, or CA 12

1/ CA 16 or CA 13 may be blended with the gradations listed.
2/ CA 6 will not be permitted in the top lift of shoulders.

Fine Aggregate for Hot- Mix asphalt (HMA) (D-1)

Effective: May 1, 2007
Revised: January 15, 2010

Add the following to the gradation tables of Article 1003.01(c) of the Standard Specifications:

FINE AGGREGATE GRADATIONS					
Grad No.	Sieve Size and Percent Passing				
	3/8	No. 4	No. 8	No. 16	No. 200
FA 22	100	6/	6/	8±8	2±2

FINE AGGREGATE GRADATIONS (metric)					
	Sieve Size and Percent Passing				
Grad No.	9.5 mm	4.75 mm	2.36 mm	1.16 mm	75 µm
FA 22	100	6/	6/	8±8	2±2

6/ For the fine aggregate gradations FA 22, the aggregate producer shall set the midpoint percent passing, and the Department will apply a range of ± ten percent. The midpoint shall not be changed without Department approval.

Revise Article 1003.03(a) of the Standard Specifications to read:

"(a) Description. Fine aggregate for HMA shall consist of sand, stone sand, chats, slag sand, or steel slag sand. For gradation FA 22, uncrushed material will not be permitted."

Revise Article 1003.03 (c) of the Standard Specifications to read:

"(c) Gradation. The fine aggregate gradation for all HMA shall be FA1, FA 2, FA 20, FA 21 or FA 22. When Reclaimed Asphalt Pavement (RAP) is incorporated in the HMA design, the use of FA 21 Gradation will not be permitted.

Gradation FA 1, FA 2, or FA 3 shall be used when required for prime coat aggregate application for HMA."

are designated as containing Class B quality coarse aggregate.

(b) RAP from Superpave (Low ESAL)/HMA (Low ESAL) IL-19.0L binder and IL-9.5L surface mixtures are designated as Class D quality coarse aggregate.

(c) RAP from Class I, Superpave (High ESAL), or HMA (High ESAL) binder mixtures, bituminous base course mixtures, and bituminous base course widening mixtures are designated as containing Class C quality coarse aggregate.

(d) RAP from bituminous stabilized subbase and BAM shoulders are designated as containing Class D quality coarse aggregate.

Aggregate Quality Testing of RAP:

The processed pile shall have a maximum tonnage of 5,000 tons (4500 metric tons). The pile shall be crushed and screened with 100 percent of the material passing the 3/4 in. (19mm) sieve. The pile shall be tested for AC content and gradation and shall conform to all requirements of Article 1031.03 Testing, herein. Once the uniformity of the gradation and AC content has been established, the Contractor shall obtain a representative sample with district oversight of the sampling. This sample shall be no less than 50 lbs (25 kg) and this sample shall be delivered to a Consultant Lab, prequalified by the Department for extraction testing according to Illinois Modified AASHTO T 164. After the AC has been extracted, the Consultant Lab shall submit the test results along with the recovered aggregate to the District Office. The cost for this testing shall be paid directly by the Contractor. The District will forward the sample to the BMPR Aggregate Lab for MicroDeval Testing, according to Illinois Modified AASHTO T 327. A maximum loss of 15.0 percent will be applied for all HMA applications.

1031.05 Use of RAP in HMA. The use of RAP in HMA shall be as follows.

(a) Coarse Aggregate Size. The coarse aggregate in all RAP shall be equal to or less than the nominal maximum size requirement for the HMA mixture to be produced.

(b) Use in HMA Surface Mixtures (High and Low ESAL). RAP stockpiles for use in HMA surface mixtures (High and Low ESAL) shall be either homogeneous or conglomerate 3/8 or variable size in which the coarse aggregate is Class B quality or better.

(c) Use in HMA Binder Mixtures (High and Low ESAL), HMA Base Course, and HMA Base Course Widening. RAP stockpiles for use in HMA binder mixtures (High and Low ESAL), HMA base course, and HMA base course widening shall be homogeneous, conglomerate 5/8, or conglomerate 3/8, conglomerate variable size, in which the coarse aggregate is Class C quality or better.

(d) Use in Shoulders and Subbase. RAP stockpiles for use in HMA shoulders and stabilized subbase (HMA) shall be homogeneous, conglomerate 5/8, conglomerate 3/8, conglomerate variable size, or conglomerate DQ.

(e) The use of RAP shall be a contractor's option when constructing HMA in all contracts. When the Contractor chooses the RAP option, the percentage of RAP shall not

exceed the amounts indicated in the table for a given N Design.

Maximum Mixture RAP Percentage

HMA Mixtures 1/3/		Maximum % Rap	
Ndesign	Binder/Leveling Binder	Surface	Polymer Modified
30	30/40 2/	30	10
50	25/40 2/4/	15/25 2/	10 4/
70	25/30 2/	10/20 2/	10
90	10/15 2/	10/15 2/	10
105	10/15 2/	10/15 2/	10

1/ For HMA Shoulder and Stabilized Sub-Base (HMA) N-30, the amount of RAP shall not exceed 50% of the mixture.

2/ Value of Max % RAP If 3/8 Rap or conglomerate variable size RAP is utilized.

3/ When RAP exceeds 20% the AC shall be PG58 -22. However, when RAP exceeds 20% and is used in full depth HMA pavement the AC shall be PG58 -28.

4/ Polymerized Leveling Binder, IL-4.75 is 15 %

1031.06 HMA Mix Designs. At the Contractor's option, HMA mixtures may be constructed utilizing RAP material meeting the above detailed requirements.

RAP designs shall be submitted for volumetric verification. If additional RAP stockpiles are tested and found that no more than 20 percent of the results, as defined under "Testing" herein, are outside of the control tolerances set for the original RAP stockpile and HMA mix design, and meets all of the requirements herein, the additional RAP stockpiles may be used in the original mix design at the percent previously verified.

1031.07 HMA Production. The coarse aggregate in all RAP used shall be equal to or less than the nominal maximum size requirement for the HMA mixture being produced.

To remove or reduce agglomerated material, a scalping screen, crushing unit, or comparable sizing device approved by the Engineer shall be used in the RAP feed system to remove or reduce oversized material. If material passing the sizing device adversely affects the mix production or quality of the mix, the sizing device shall be set at a size specified by the Engineer.

If the RAP control tolerances or QC/QA test results require corrective action, the Contractor shall cease production of the mixture containing RAP and either switch to the virgin aggregate design or submit a new RAP design. When producing mixtures containing conglomerate 3/8 or conglomerate variable size RAP, a positive dust control system shall be utilized.

HMA plants utilizing RAP shall be capable of automatically recording and printing the following information.

(a) Drier Drum Plants

(1) Date, month, year, and time to the nearest minute for each print.

(2) HMA Mix number assigned by the Department

(3) Accumulated weight of dry aggregate (combined or individual) in tons (metric tons) Accumulated weight of dry aggregate (combined or individual) in tons (metric tons) to the nearest 0.1 ton (0.1 metric ton)

(4) Accumulated dry weight of RAP in tons (metric tons) to the nearest 0.1 ton (0.1 metric ton)

(5) Accumulated mineral filler in revolutions, tons (metric tons), etc. to the nearest 0.1 unit.

(6) Accumulated asphalt binder in gallons (liters), tons (metric tons), etc. to the nearest 0.1 unit.

(7) Residual asphalt binder in the RAP material (per size) as a percent of the total mix to the nearest 0.1 unit.

(8) Aggregate and RAP moisture compensators in percent as set on the control panel (Required when accumulated or individual aggregate and RAP are printed in wet condition).

(b) Batch Plants

(1) Date, month, year, and time to the nearest minute for each print.

(2) HMA mix number assigned by the Department.

(3) Individual virgin aggregate hot bin batch weights to the nearest pound (kilogram)

(4) Mineral filler weight to the nearest pound (kilogram).

(5) Individual RAP Aggregate weight to the nearest pound (kilogram).

(6) Virgin asphalt binder weight to the nearest pound (kilogram)

(7) Residual asphalt binder of each RAP size material as a percent of the total mix to the nearest 0.1 percent.

The printouts shall be maintained in a file at the plant for a minimum of one year or as directed by the Engineer and shall be made available upon request. The printing system will be inspected by the Engineer prior to production and verified at the beginning of each construction season thereafter.

1031.08 RAP in Aggregate Surface Course and Aggregate Shoulders. The use of RAP in aggregate surface course and aggregate shoulders shall be as follows.

(a) Stockpiles and Testing. RAP stockpiles may be any of those listed in Article 1031.02, except "Other". The testing requirements of Article 1031.03 shall not apply.

(b) Gradation. One hundred percent of the RAP material shall pass the 1 1/2 in. (37.5 mm) sieve. The RAP material shall be reasonably well graded from coarse to fine. RAP material that is gap-graded or single sized will not be accepted."

BDE SPECIAL PROVISIONS
For the April 23 and June 11, 2010 Lettings

The following special provisions indicated by an "x" are applicable to this contract and will be included by the Project Development and Implementation Section of the BD&E. An * indicates a new or revised special provision for the letting.

File Name	#		Special Provision Title	Effective	Revised
80240	1		Above Grade Inlet Protection	July 1, 2009	
80099	2		Accessible Pedestrian Signals (APS)	April 1, 2003	Jan. 1, 2007
80243	3		American Recovery and Reinvestment Act Provisions	April 1, 2009	
80236	4		American Recovery and Reinvestment Act Signing	April 1, 2009	April 15, 2009
80186	5		Alkali-Silica Reaction for Cast-in-Place Concrete	Aug. 1, 2007	Jan. 1, 2009
80213	6		Alkali-Silica Reaction for Precast and Precast Prestressed Concrete	Jan. 1, 2009	
80207	7		Approval of Proposed Borrow Areas, Use Areas, and/or Waste Areas Inside Illinois State Borders	Nov. 1, 2008	
80192	8		Automated Flagger Assistance Device	Jan. 1, 2008	
80173	9	✓	Bituminous Materials Cost Adjustments	Nov. 2, 2006	April 1, 2009
80241	10		Bridge Demolition Debris	July 1, 2009	
50261	11		Building Removal Case I (Non Friable and Friable Asbestos)	Sept. 1, 1990	April 1, 2010
50481	12		Building Removal Case II (Non Friable Asbestos)	Sept. 1, 1990	April 1, 2010
50491	13		Building Removal Case III (Friable Asbestos)	Sept. 1, 1990	April 1, 2010
50531	14		Building Removal Case IV (No Asbestos)	Sept. 1, 1990	April 1, 2010
80166	15		Cement	Jan. 1, 2007	April 1, 2009
80198	16		Completion Date (via calendar days)	April 1, 2008	
80199	17		Completion Date (via calendar days) Plus Working Days	April 1, 2008	
80094	18		Concrete Admixtures	Jan. 1, 2003	April 1, 2009
80214	19		Concrete Gutter, Type A	Jan. 1, 2009	
80215	20		Concrete Joint Sealer	Jan. 1, 2009	
80226	21		Concrete Mix Designs	April 1, 2009	
80237	22	✓	Construction Air Quality – Diesel Vehicle Emissions Control	April 1, 2009	July 1, 2009
80239	23	✓	Construction Air Quality – Idling Restrictions	April 1, 2009	
80227	24		Determination of Thickness	April 1, 2009	
80177	25		Digital Terrain Modeling for Earthwork Calculations	April 1, 2007	
80029	26		Disadvantaged Business Enterprise Participation	Sept. 1, 2000	Jan. 1, 2010
80178	27		Dowel Bars	April 1, 2007	Jan. 1, 2008
80179	28		Engineer's Field Office Type A	April 1, 2007	Aug. 1, 2008
80205	29		Engineer's Field Office Type B	Aug. 1, 2008	
80189	30	✓	Equipment Rental Rates	Aug. 2, 2007	Jan. 2, 2008
80244	31		Filter Fabric	Nov. 1, 2009	Jan. 1, 2010
80228	32	✓	Flagger at Side Roads and Entrances	April 1, 2009	
80249	33		Frames and Grates	Jan. 1, 2010	
80229	34		Fuel Cost Adjustment	April 1, 2009	July 1, 2009
80169	35		High Tension Cable Median Barrier	Jan. 1, 2007	April 1, 2009
80194	36		HMA – Hauling on Partially Completed Full-Depth Pavement	Jan. 1, 2008	
80245	37	✓	Hot-Mix Asphalt – Anti-Stripping Additive	Nov. 1, 2009	
80246	38		Hot-Mix Asphalt – Density Testing of Longitudinal Joints	Jan. 1, 2010	
80250	39	✓	Hot-Mix Asphalt – Drop-Offs	Jan. 1, 2010	
80259	40		Hot Mix Asphalt – Fine Aggregate	April 1, 2010	
80201	41	✓	Hot-Mix Asphalt – Plant Test Frequency	April 1, 2008	Jan. 1, 2010
80251	42	✓	Hot-Mix Asphalt – QC/QA Acceptance Criteria	Jan. 1, 2010	
80202	43	✓	Hot-Mix Asphalt – Transportation	April 1, 2008	
80109	44		Impact Attenuators	Nov. 1, 2003	Nov. 1, 2008
80110	45		Impact Attenuators, Temporary	Nov. 1, 2003	Jan. 1, 2007
80252	46		Improved Subgrade	Jan. 1, 2010	

File Name	#		Special Provision Title	Effective	Revised
80230	47	✓	Liquidated Damages	April 1, 2009	
80196	48		Mast Arm Assembly and Pole	Jan. 1, 2008	Jan. 1, 2009
80045	49		Material Transfer Device	June 15, 1999	Jan. 1, 2009
80203	50		Metal Hardware Cast into Concrete	April 1, 2008	April 1, 2009
80165	51		Moisture Cured Urethane Paint System	Nov. 1, 2006	Jan. 1, 2010
80238	52		Monthly Employment Report	April 1, 2009	Jan. 1, 2010
80253	53		Movable Traffic Barrier System	Jan. 1, 2010	
80082	54	✓	Multilane Pavement Patching	Nov. 1, 2002	
80180	55		National Pollutant Discharge Elimination System / Erosion and Sediment Control Deficiency Deduction	April 1, 2007	Nov. 1, 2009
80208	56		Nighttime Work Zone Lighting	Nov. 1, 2008	
80182	57		Notification of Reduced Width	April 1, 2007	
80069	58		Organic Zinc-Rich Paint System	Nov. 1, 2001	Jan. 1, 2010
80216	59		Partial Exit Ramp Closure for Freeway/Expressway	Jan. 1, 2009	
80231	60		Pavement Marking Removal	April 1, 2009	
80254	61	✓	Pavement Patching	Jan. 1, 2010	
80022	62	✓	Payments to Subcontractors	June 1, 2000	Jan. 1, 2006
80209	63	✓	Personal Protective Equipment	Nov. 1, 2008	
80232	64		Pipe Culverts	April 1, 2009	April 1, 2010
80119	65		Polyurea Pavement Marking	April 1, 2004	Jan. 1, 2009
80210	66		Portland Cement Concrete Inlay or Overlay	Nov. 1, 2008	
80170	67		Portland Cement Concrete Plants	Jan. 1, 2007	
80217	68		Post Clips for Extruded Aluminum Signs	Jan. 1, 2009	
80171	69		Precast Handling Holes	Jan. 1, 2007	
80218	70		Preventive Maintenance – Bituminous Surface Treatment	Jan. 1, 2009	April 1, 2009
80219	71		Preventive Maintenance – Cape Seal	Jan. 1, 2009	April 1, 2009
80220	72		Preventive Maintenance – Micro-Surfacing	Jan. 1, 2009	
80221	73		Preventive Maintenance – Slurry Seal	Jan. 1, 2009	
80211	74		Prismatic Curb Reflectors	Nov. 1, 2008	
80015	75	✓	Public Convenience and Safety	Jan. 1, 2000	
34261	76		Railroad Protective Liability Insurance	Dec. 1, 1986	Jan. 1, 2006
80157	77		Railroad Protective Liability Insurance (5 and 10)	Jan. 1, 2006	
80247	78		Raised Reflective Pavement Markers	Nov. 1, 2009	April 1, 2010
80223	79		Ramp Closure for Freeway/Expressway	Jan. 1, 2009	
80172	80		Reclaimed Asphalt Pavement (RAP)	Jan. 1, 2007	Jan. 1, 2010
80183	81	✓	Reflective Sheeting on Channelizing Devices	April 1, 2007	Nov. 1, 2008
80206	82		Reinforcement Bars – Storage and Protection	Aug. 1, 2008	April 1, 2009
80224	83		Restoring Bridge Approach Pavements Using High-Density Foam	Jan. 1, 2009	
80131	84		Seeding	July 1, 2004	Jan. 1, 2010
80152	85		Self-Consolidating Concrete for Cast-In-Place Construction	Nov. 1, 2005	Jan. 1, 2009
80132	86		Self-Consolidating Concrete for Precast Products	July 1, 2004	Jan. 1, 2007
80127	87		Steel Cost Adjustment	April 2, 2004	April 1, 2009
80255	88		Stone Matrix Asphalt	Jan. 1, 2010	
80234	89		Storm Sewers	April 1, 2009	April 1, 2010
80143	90	✓	Subcontractor Mobilization Payments	April 2, 2005	
80075	91		Surface Testing of Pavements	April 1, 2002	Jan. 1, 2007
80087	92		Temporary Erosion Control	Nov. 1, 2002	Jan. 1, 2010
80256	93		Temporary Longitudinal Traffic Barrier System	Jan. 1, 2010	
80225	94		Temporary Raised Pavement Marker	Jan. 1, 2009	
80176	95	✓	Thermoplastic Pavement Markings	Jan. 1, 2007	
80257	96		Traffic Barrier Terminal, Type 6	Jan. 1, 2010	
20338	97		Training Special Provisions	Oct. 15, 1975	
80258	98		Truck Mounted/Trailer Mounted Attenuators	Jan. 1, 2010	

File Name	#	Special Provision Title	Effective	Revised
80071	99	[✓] Working Days	Jan. 1, 2002	

The following special provisions are in the 2010 Supplemental Specifications and Recurring Special Provisions:

File Name	Special Provision Title	New Location	Effective	Revised
80193	Concrete Barrier	Section 637	Jan. 1, 2008	
80175	Epoxy Pavement Markings	Section 1095	Jan. 1, 2007	
80181	Hot-Mix Asphalt – Field Voids in the Mineral Aggregate	Section 1030	April 1, 2007	April 1, 2008
80136	Hot-Mix Asphalt Mixture IL-4.75	Sections 406, 1003, 1030, 1032 and 1102	Nov. 1, 2004	Jan. 1, 2008
80195	Hot-Mix Asphalt Mixture IL-9.5L	Sections 1004 and 1030	Jan. 1, 2008	
80129	Notched Wedge Longitudinal Joint	Section 406	July 1, 2004	Jan. 1, 2007
80235	Payrolls and Payroll Records	Check Sheets #1 and #5	Mar. 1, 2009	July 1, 2009
80134	Plastic Blockouts for Guardrail	Section 630	Nov. 1, 2004	Jan. 1, 2007
80151	Reinforcement Bars	Section 1006	Nov. 1, 2005	April 1, 2009
80184	Retroreflective Sheeting, Nonreflective Sheeting, and Translucent Overlay Film for Highway Signs	Sections 1090, 1091, 1092 and 1093	April 1, 2007	
80212	Sign Panels and Sign Panel Overlays	Supplemental	Nov. 1, 2008	
80197	Silt Filter Fence	Sections 1080 and 1081	Jan. 1, 2008	
80153	Steel Plate Beam Guardrail	Section 1006	Nov. 1, 2005	Aug. 1, 2007
80191	Stone Gradation Testing	Section 1005	Nov. 1, 2007	
80185	Type ZZ Retroreflective Sheeting, Nonreflective Sheeting, and Translucent Overlay Film for Highway Signs	Sections 1090, 1091, 1092 and 1093	April 1, 2007	
80149	Variable Spaced Tining	Section 420	Aug. 1, 2005	Jan. 1, 2007
80204	Woven Wire Fence	Section 1006	April 1, 2008	

The following special provisions require additional information from the designer. The additional information needs to be included in a separate document attached to this check sheet. The Project Development and Implementation section will then include the information in the applicable special provision. The Special Provisions are:

- Bridge Demolition Debris
- Building Removal-Case I
- Building Removal-Case II
- Building Removal-Case III
- Building Removal-Case IV
- Completion Date
- Completion Date Plus Working Days
- DBE Participation
- Material Transfer Device
- Railroad Protective Liability Insurance
- Training Special Provisions
- Working Days

BITUMINOUS MATERIALS COST ADJUSTMENTS (BDE) (RETURN FORM WITH BID)

Effective: November 2, 2006
Revised: April 1, 2009

Description. Bituminous material cost adjustments will be made to provide additional compensation to the Contractor, or credit to the Department, for fluctuations in the cost of bituminous materials when optioned by the Contractor. The adjustments shall apply to permanent and temporary hot-mix asphalt (HMA) mixtures, bituminous surface treatments (cover and seal coats), and pavement preservation type surface treatments. The adjustments shall not apply to bituminous prime coats, tack coats, crack filling/sealing, or joint filling/sealing.

The bidder shall indicate on the attached form whether or not this special provision will be part of the contract and submit the completed form with his/her bid. Failure to submit the form, or failure to fill out the form completely, shall make this contract exempt of bituminous materials cost adjustments.

Method of Adjustment. Bituminous materials cost adjustments will be computed as follows.

$CA = (BPI_P - BPI_L) \times (\%AC_V / 100) \times Q$

Where: CA = Cost Adjustment, $.
BPI_P = Bituminous Price Index, as published by the Department for the month the work is performed, $/ton ($/metric ton).
BPI_L = Bituminous Price Index, as published by the Department for the month prior to the letting, $/ton ($/metric ton).
$\%AC_V$ = Percent of virgin Asphalt Cement in the Quantity being adjusted. For HMA mixtures, the % AC_V will be determined from the adjusted job mix formula. For bituminous materials applied, a performance graded or cutback asphalt will be considered to be 100% AC_V and undiluted emulsified asphalt will be considered to be 65% AC_V.
Q = Authorized construction Quantity, tons (metric tons) (see below).

For HMA mixtures measured in square yards: Q, tons = $A \times D \times (G_{mb} \times 46.8) / 2000$. For HMA mixtures measured in square meters: Q, metric tons = $A \times D \times (G_{mb} \times 24.99) / 1000$. When computing adjustments for full-depth HMA pavement, separate calculations will be made for the binder and surface courses to account for their different G_{mb} and % AC_V.

For bituminous materials measured in gallons: Q, tons = V x 8.33 lb/gal x SG / 2000
For bituminous materials measured in liters: Q, metric tons = V x 1.0 kg/L x SG / 1000

Where: A = Area of the HMA mixture, sq yd (sq m).
D = Depth of the HMA mixture, in. (mm).
G_{mb} = Average bulk specific gravity of the mixture, from the approved mix design.
V = Volume of the bituminous material, gal (L).
SG = Specific Gravity of bituminous material as shown on the bill of lading.

Basis of Payment. Bituminous materials cost adjustments may be positive or negative but will only be made when there is a difference between the BPI_L and BPI_P in excess of five percent, as calculated by:

$$\text{Percent Difference} = \{(BPI_L - BPI_P) \div BPI_L\} \times 100$$

Bituminous materials cost adjustments will be calculated for each calendar month in which applicable bituminous material is placed; and will be paid or deducted when all other contract requirements for the work placed during the month are satisfied. The adjustments shall not apply during contract time subject to liquidated damages for completion of the entire contract.

Return With Bid

ILLINOIS DEPARTMENT OF TRANSPORTATION

OPTION FOR BITUMINOUS MATERIALS COST ADJUSTMENTS

The bidder shall submit this completed form with his/her bid. Failure to submit the form, or failure to fill out the form completely, shall make this contract exempt of bituminous materials cost adjustments. After award, this form, when submitted, shall become part of the contract.

Contract No.: _____

Company Name:_____ _____

Contractor's Option:

Is your company opting to include this special provision as part of the contract?

Yes ☐ No ☐

Signature: _____ **Date:** _____

80173

CONSTRUCTION AIR QUALITY - DIESEL VEHICLE EMISSIONS CONTROL (BDE)

Effective: April 1, 2009
Revised: July 1, 2009

Diesel Vehicle Emissions Control. The reduction of construction air emissions shall be accomplished by using cleaner burning diesel fuel. The term "equipment" refers to any and all diesel fuel powered devices rated at 50 hp and above, to be used on the project site in excess of seven calendar days over the course of the construction period on the project site (including any "rental" equipment).

All equipment on the jobsite, with engine ratings of 50 hp and above, shall be required to: use Ultra Low Sulfur Diesel fuel (ULSD) exclusively (15 ppm sulfur content or less).

Diesel powered equipment in non-compliance will not be allowed to be used on the project site, and is also subject to a notice of non-compliance as outlined below.

The Contractor shall submit copies of monthly summary reports and include certified copies of the ULSD diesel fuel delivery slips for diesel fuel delivered to the jobsite for the reporting time period, noting the quantity of diesel fuel used.

If any diesel powered equipment is found to be in non-compliance with any portion of this specification, the Engineer will issue the Contractor a notice of non-compliance and identify an appropriate period of time, as outlined below under environmental deficiency deduction, in which to bring the equipment into compliance or remove it from the project site.

Any costs associated with bringing any diesel powered equipment into compliance with these diesel vehicle emissions controls shall be considered as included in the contract unit prices bid for the various items of work involved and no additional compensation will be allowed. The Contractor's compliance with this notice and any associated regulations shall also not be grounds for a claim.

Environmental Deficiency Deduction. When the Engineer is notified, or determines that an environmental control deficiency exists, he/she will notify the Contractor in writing, and direct the Contractor to correct the deficiency within a specified time period. The specified time-period, which begins upon Contractor notification, will be from 1/2 hour to 24 hours long, based on the urgency of the situation and the nature of the deficiency. The Engineer shall be the sole judge regarding the time period.

The deficiency will be based on lack of repair, maintenance and diesel vehicle emissions control.

If the Contractor fails to correct the deficiency within the specified time frame, a daily monetary deduction will be imposed for each calendar day or fraction thereof the deficiency continues to exist. The calendar day(s) will begin when the time period for correction is exceeded and end

with the Engineer's written acceptance of the correction. The daily monetary deduction will be $1,000.00 for each deficiency identified.

If a Contractor or subcontractor accumulates three environmental deficiency deductions in a contract period, the Contractor will be shutdown until the deficiency is corrected. Such a shutdown will not be grounds for any extension of contract time, waiver of penalties, or be grounds for any claim.

80237

CONSTRUCTION AIR QUALITY - IDLING RESTRICTIONS (BDE)

Effective: April 1, 2009

Idling Restrictions. The Contractor shall establish truck-staging areas for all diesel powered vehicles that are waiting to load or unload material at the jobsite. Staging areas shall be located where the diesel emissions from the equipment will have a minimum impact on adjacent sensitive receptors. The Department will review the selection of staging areas, whether within or outside the existing highway right-of-way, to avoid locations near sensitive areas or populations to the extent possible. Sensitive receptors include, but are not limited to, hospitals, schools, residences, motels, hotels, daycare facilities, elderly housing and convalescent facilities. Diesel powered engines shall also be located as far away as possible from fresh air intakes, air conditioners, and windows. The Engineer will approve staging areas before implementation.

Diesel powered vehicle operators may not cause or allow the motor vehicle, when it is not in motion, to idle for more than a total of 10 minutes within any 60 minute period, except under any of the following circumstances:

1) The motor vehicle has a gross vehicle weight rating of less than 8000 lb (3630 kg).
2) The motor vehicle idles while forced to remain motionless because of on-highway traffic, an official traffic control device or signal, or at the direction of a law enforcement official.
3) The motor vehicle idles when operating defrosters, heaters, air conditioners, or other equipment solely to prevent a safety or health emergency.
4) A police, fire, ambulance, public safety, other emergency or law enforcement motor vehicle, or any motor vehicle used in an emergency capacity, idles while in an emergency or training mode and not for the convenience of the vehicle operator.
5) The primary propulsion engine idles for maintenance, servicing, repairing, or diagnostic purposes if idling is necessary for such activity.
6) A motor vehicle idles as part of a government inspection to verify that all equipment is in good working order, provided idling is required as part of the inspection.
7) When idling of the motor vehicle is required to operate auxiliary equipment to accomplish the intended use of the vehicle (such as loading, unloading, mixing, or processing cargo; controlling cargo temperature; construction operations, lumbering operations; oil or gas well servicing; or farming operations), provided that this exemption does not apply when the vehicle is idling solely for cabin comfort or to operate non-essential equipment such as air conditioning, heating, microwave ovens, or televisions.
8) When the motor vehicle idles due to mechanical difficulties over which the operator has no control.
9) The outdoor temperature is less than 32 °F (0 °C) or greater than 80 °F (26 °C).

When the outdoor temperature is greater than or equal to 32 °F (0 °C) or less than or equal to 80 °F (26 °C), a person who operates a motor vehicle operating on diesel fuel shall not cause or allow the motor vehicle to idle for a period greater than 30 minutes in any 60 minute period while waiting to weigh, load, or unload cargo or freight, unless the vehicle is in a line of vehicles that regularly and periodically moves forward.

The above requirements do not prohibit the operation of an auxiliary power unit or generator set as an alternative to idling the main engine of a motor vehicle operating on diesel fuel.

Environmental Deficiency Deduction. When the Engineer is notified, or determines that an environmental control deficiency exists based on non-compliance with the idling restrictions, he/she will notify the Contractor, and direct the Contractor to correct the deficiency.

If the Contractor fails to correct the deficiency a monetary deduction will be imposed. The monetary deduction will be $1,000.00 for each deficiency identified.

80239

EQUIPMENT RENTAL RATES (BDE)

Effective: August 2, 2007
Revised: January 2, 2008

Replace the second and third paragraphs of Article 105.07(b)(4)a. of the Standard Specifications with the following:

> "Equipment idled which cannot be used on other work, and which is authorized to standby on the project site by the Engineer, will be paid for according to Article 109.04(b)(4)."

Replace Article 109.04(b)(4) of the Standard Specifications with the following:

"(4) Equipment. Equipment used for extra work shall be authorized by the Engineer. The equipment shall be specifically described, be of suitable size and capacity for the work to be performed, and be in good operating condition. For such equipment, the Contractor will be paid as follows.

a. Contractor Owned Equipment. Contractor owned equipment will be paid for by the hour using the applicable FHWA hourly rate from the "Equipment Watch Rental Rate Blue Book" (Blue Book) in effect when the force account work begins. The FHWA hourly rate is calculated as follows.

FHWA hourly rate = (monthly rate/176) x (model year adj.) x (Illinois adj.) + EOC

Where: EOC = Estimated Operating Costs per hour (from the Blue Book)

The time allowed will be the actual time the equipment is operating on the extra work. For the time required to move the equipment to and from the site of the extra work and any authorized idle (standby) time, payment will be made at the following hourly rate: 0.5 x (FHWA hourly rate - EOC).

All time allowed shall fall within the working hours authorized for the extra work.

The rates above include the cost of fuel, oil, lubrication, supplies, small tools, necessary attachments, repairs, overhaul and maintenance of any kind, depreciation, storage, overhead, profits, insurance, and all incidentals. The rates do not include labor.

The Contractor shall submit to the Engineer sufficient information for each piece of equipment and its attachments to enable the Engineer to determine the proper equipment category. If a rate is not established in the Blue Book for a particular piece of equipment, the Engineer will establish a rate for that piece of equipment that is consistent with its cost and use in the industry.

b. Rented Equipment. Whenever it is necessary for the Contractor to rent equipment to perform extra work, the rental and transportation costs of the equipment plus five percent for overhead will be paid. In no case shall the rental rates exceed those of established distributors or equipment rental agencies.

All prices shall be agreed to in writing before the equipment is used."

80189

FLAGGER AT SIDE ROADS AND ENTRANCES (BDE)

Effective: April 1, 2009

Revise the second paragraph of Article 701.13(a) of the Standard Specifications to read:

> "The Engineer will determine when a side road or entrance shall be closed to traffic. A flagger will be required at each side road or entrance remaining open to traffic within the operation where two-way traffic is maintained on one lane of pavement. The flagger shall be positioned as shown on the plans or as directed by the Engineer."

Revise the first and second paragraph of Article 701.20(i) of the Standard Specifications to read:

> "Signs, barricades, or other traffic control devices required by the Engineer over and above those specified will be paid for according to Article 109.04. All flaggers required at side roads and entrances remaining open to traffic including those that are shown on the Highway Standards and/or additional barricades required by the Engineer to close side roads and entrances will be paid for according to Article 109.04."

80228

HOT-MIX ASPHALT – ANTI-STRIPPING ADDITIVE (BDE)

Effective: November 1, 2009

Revise the first and second paragraphs of Article 1030.04(c) of the Standard Specifications to read:

"(c) Determination of Need for Anti-Stripping Additive. The mixture designer shall determine if an additive is needed in the mix to prevent stripping. The determination will be made on the basis of tests performed according to Illinois Modified AASHTO T 283. To be considered acceptable by the Department as a mixture not susceptible to stripping, the conditioned to unconditioned split tensile strength ratio (TSR) shall be equal to or greater than 0.85 for 6 in. (150 mm) specimens. Mixtures, either with or without an additive, with TSRs less than 0.85 for 6 in. (150 mm) specimens will be considered unacceptable. Also, the conditioned tensile strength for mixtures containing an anti-strip additive shall not be lower than the original conditioned tensile strength determined for the same mixture without the anti-strip additive.

If it is determined that an additive is required, the additive may be hydrated lime, slaked quicklime, or a liquid additive, at the Contractor's option."

80245

HOT-MIX ASPHALT – DROP-OFFS (BDE)

Effective: January 1, 2010

Revise the third paragraph of Article 701.07 of the Standard Specifications to read:

"At locations where construction operations result in a differential in elevation exceeding 3 in. (75 mm) between the edge of pavement or edge of shoulder within 3 ft (900 mm) of the edge of the pavement and the earth or aggregate shoulders, Type I or II barricades or vertical panels shall be placed at 100 ft (30 m) centers on roadways where the posted speed limit is 45 mph or greater and at 50 ft (15 m) centers on roadways where the posted speed limit is less than 45 mph."

80250

HOT-MIX ASPHALT – PLANT TEST FREQUENCY (BDE)

Effective: April 1, 2008
Revised: January 1, 2010

Revise the table in Article 1030.05(d)(2)a. of the Standard Specifications to read:

"Parameter	Frequency of Tests High ESAL Mixture Low ESAL Mixture	Frequency of Tests All Other Mixtures	Test Method See Manual of Test Procedures for Materials
Aggregate Gradation % passing sieves: 1/2 in. (12.5 mm), No. 4 (4.75 mm), No. 8 (2.36 mm), No. 30 (600 µm) No. 200 (75 µm) Note 1.	1 washed ignition oven test on the mix per half day of production Note 4.	1 washed ignition oven test on the mix per day of production Note 4.	Illinois Procedure
Asphalt Binder Content by Ignition Oven Note 2.	1 per half day of production	1 per day	Illinois-Modified AASHTO T 308
VMA Note 3.	Day's production ≥ 1200 tons: 1 per half day of production	N/A	Illinois Modified AASHTO R 35
	Day's production < 1200 tons: 1 per half day of production for first 2 days and 1 per day thereafter (first sample of the day)		
Air Voids Bulk Specific Gravity of Gyratory Sample	Day's production ≥ 1200 tons: 1 per half day of production	1 per day	Illinois-Modified AASHTO T 312

"Parameter	Frequency of Tests High ESAL Mixture Low ESAL Mixture	Frequency of Tests All Other Mixtures	Test Method See Manual of Test Procedures for Materials
	Day's production < 1200 tons: 1 per half day of production for first 2 days and 1 per day thereafter (first sample of the day)		
Maximum Specific Gravity of Mixture	Day's production ≥ 1200 tons: 1 per half day of production	1 per day	Illinois-Modified AASHTO T 209
	Day's production < 1200 tons: 1 per half day of production for first 2 days and 1 per day thereafter (first sample of the day)		

Note 1. The No. 8 (2.36 mm) and No. 30 (600 μm) sieves are not required for All Other Mixtures.

Note 2. The Engineer may waive the ignition oven requirement for asphalt binder content if the aggregates to be used are known to have ignition asphalt binder content calibration factors which exceed 1.5 percent. If the ignition oven requirement is waived, other Department approved methods shall be used to determine the asphalt binder content.

Note 3. The G_{sb} used in the voids in the mineral aggregate (VMA) calculation shall be the same average G_{sb} value listed in the mix design.

Note 4. The Engineer reserves the right to require additional hot bin gradations for batch plants if control problems are evident."

HOT-MIX ASPHALT – QC/QA ACCEPTANCE CRITERIA (BDE)

Effective: January 1, 2010

Revise Article 1030.05(f)(3) of the Standard Specifications to read:

"(3) Department assurance tests for voids, field VMA, and density."

80251

HOT-MIX ASPHALT – TRANSPORTATION (BDE)

Effective: April 1, 2008

Revise Article 1030.08 of the Standard Specifications to read:

"**1030.08 Transportation.** Vehicles used in transporting HMA shall have clean and tight beds. The beds shall be sprayed with asphalt release agents from the Department's approved list. In lieu of a release agent, the Contractor may use a light spray of water with a light scatter of manufactured sand (FA 20 or FA 21) evenly distributed over the bed of the vehicle. After spraying, the bed of the vehicle shall be in a completely raised position and it shall remain in this position until all excess asphalt release agent or water has been drained.

When the air temperature is below 60 °F (15 °C), the bed, including the end, endgate, sides and bottom shall be insulated with fiberboard, plywood or other approved insulating material and shall have a thickness of not less than 3/4 in (20 mm). When the insulation is placed inside the bed, the insulation shall be covered with sheet steel approved by the Engineer. Each vehicle shall be equipped with a cover of canvas or other suitable material meeting the approval of the Engineer which shall be used if any one of the following conditions is present.

(a) Ambient air temperature is below 60 °F (15 °C).

(b) The weather is inclement.

(c) The temperature of the HMA immediately behind the paver screed is below 250 °F (120 °C).

The cover shall extend down over the sides and ends of the bed for a distance of approximately 12 in. (300 mm) and shall be fastened securely. The covering shall be rolled back before the load is dumped into the finishing machine."

80202

LIQUIDATED DAMAGES (BDE)

Effective: April 1, 2009

Revise the table in Article 108.09 of the Standard Specifications to read:

"Schedule of Deductions for Each Day of Overrun in Contract Time			
Original Contract Amount		Daily Charges	
From More Than	To and Including	Calendar Day	Work Day
$ 0	$ 100,000	$ 375	$ 500
100,000	500,000	625	875
500,000	1,000,000	1,025	1,425
1,000,000	3,000,000	1,125	1,550
3,000,000	5,000,000	1,425	1,950
5,000,000	10,000,000	1,700	2,350
10,000,000	And over	3,325	4,650"

80230

MULTILANE PAVEMENT PATCHING (BDE)

Effective: November 1, 2002

Pavement broken and holes opened for patching shall be completed prior to weekend or holiday periods. Should delays of any type or for any reason prevent the completion of the work, temporary patches shall be constructed. Material able to support the average daily traffic and meeting the approval of the Engineer shall be used for the temporary patches. The cost of furnishing, placing, maintaining, removing and disposing of the temporary work, including traffic control, shall be the responsibility of the Contractor.

80082

PAVEMENT PATCHING (BDE)

Effective: January 1, 2010

Revise the first sentence of the second paragraph of Article 701.17(e)(1) of the Standard Specifications to read:

"In addition to the traffic control and protection shown elsewhere in the contract for pavement, two devices shall be placed immediately in front of each open patch, open hole, and broken pavement where temporary concrete barriers are not used to separate traffic from the work area."

80254

PAYMENTS TO SUBCONTRACTORS (BDE)

Effective: June 1, 2000
Revised: January 1, 2006

Federal regulations found at 49 CFR §26.29 mandate the Department to establish a contract clause to require Contractors to pay subcontractors for satisfactory performance of their subcontracts and to set the time for such payments.

State law also addresses the timing of payments to be made to subcontractors and material suppliers. Section 7 of the Prompt Payment Act, 30 ILCS 540/7, requires that when a Contractor receives any payment from the Department, the Contractor shall make corresponding, proportional payments to each subcontractor and material supplier performing work or supplying material within 15 calendar days after receipt of the Department payment. Section 7 of the Act further provides that interest in the amount of two percent per month, in addition to the payment due, shall be paid to any subcontractor or material supplier by the Contractor if the payment required by the Act is withheld or delayed without reasonable cause. The Act also provides that the time for payment required and the calculation of any interest due applies to transactions between subcontractors and lower-tier subcontractors and material suppliers throughout the contracting chain.

This Special Provision establishes the required federal contract clause, and adopts the 15 calendar day requirement of the State Prompt Payment Act for purposes of compliance with the federal regulation regarding payments to subcontractors. This contract is subject to the following payment obligations.

When progress payments are made to the Contractor according to Article 109.07 of the Standard Specifications, the Contractor shall make a corresponding payment to each subcontractor and material supplier in proportion to the work satisfactorily completed by each subcontractor and for the material supplied to perform any work of the contract. The proportionate amount of partial payment due to each subcontractor and material supplier throughout the contracting chain shall be determined by the quantities measured or otherwise determined as eligible for payment by the Department and included in the progress payment to the Contractor. Subcontractors and material suppliers shall be paid by the Contractor within 15 calendar days after the receipt of payment from the Department. The Contractor shall not hold retainage from the subcontractors. These obligations shall also apply to any payments made by subcontractors and material suppliers to their subcontractors and material suppliers; and to all payments made to lower tier subcontractors and material suppliers throughout the contracting chain. Any payment or portion of a payment subject to this provision may only be withheld from the subcontractor or material supplier to whom it is due for reasonable cause.

This Special Provision does not create any rights in favor of any subcontractor or material supplier against the State or authorize any cause of action against the State on account of any payment, nonpayment, delayed payment, or interest claimed by application of the State Prompt Payment Act. The Department will not approve any delay or postponement of the 15 day requirement except for reasonable cause shown after notice and hearing pursuant to Section

7(b) of the State Prompt Payment Act. State law creates other and additional remedies available to any subcontractor or material supplier, regardless of tier, who has not been paid for work properly performed or material furnished. These remedies are a lien against public funds set forth in Section 23(c) of the Mechanics Lien Act, 770 ILCS 60/23(c), and a recovery on the Contractor's payment bond according to the Public Construction Bond Act, 30 ILCS 550.

80022

PERSONAL PROTECTIVE EQUIPMENT (BDE)

Effective: November 1, 2008

Revise the first sentence of Article 701.12 of the Standard Specifications to read:

"All personnel on foot, excluding flaggers, within the highway right-of-way shall wear a fluorescent orange, fluorescent yellow/green, or a combination of fluorescent orange and fluorescent yellow/green vest meeting the requirements of ANSI/ISEA 107-2004 for Conspicuity Class 2 garments."

80209

PUBLIC CONVENIENCE AND SAFETY (BDE)

Effective: January 1, 2000

Add the following paragraph after the fourth paragraph of Article 107.09 of the Standard Specifications:

"On weekends, excluding holidays, roadways with Average Daily Traffic of 25,000 or greater, all lanes shall be open to traffic from 3:00 P.M. Friday to midnight Sunday except where structure construction or major rehabilitation makes it impractical."

80015

REFLECTIVE SHEETING ON CHANNELIZING DEVICES (BDE)

Effective: April 1, 2007
Revised: November 1, 2008

Revise the seventh paragraph of Article 1106.02 of the Standard Specifications to read:

"At the time of manufacturing, the retroreflective prismatic sheeting used on channelizing devices shall meet or exceed the initial minimum coefficient of retroreflection as specified in the following table. Measurements shall be conducted according to ASTM E 810, without averaging. Sheeting used on cones, drums and flexible delineators shall be reboundable as tested according to ASTM D 4956. Prestriped sheeting for rigid substrates on barricades shall be white and orange. The sheeting shall be uniform in color and devoid of streaks throughout the length of each roll. The color shall conform to the latest appropriate standard color tolerance chart issued by the U.S. Department of Transportation, Federal Highway Administration, and to the daytime and nighttime color requirements of ASTM D 4956.

Initial Minimum Coefficient of Retroreflection candelas/foot candle/sq ft (candelas/lux/sq m) of material				
Observation Angle (deg.)	Entrance Angle (deg.)	White	Orange	Fluorescent Orange
0.2	-4	365	160	150
0.2	+30	175	80	70
0.5	-4	245	100	95
0.5	+30	100	50	40"

Revise the first sentence of the first paragraph of Article 1106.02(c) of the Standard Specifications to read:

"Barricades and vertical panels shall have alternating white and orange stripes sloping downward at 45 degrees toward the side on which traffic will pass."

Revise the third sentence of the first paragraph of Article 1106.02(d) of the Standard Specifications to read:

"The bottom panels shall be 8 x 24 in. (200 x 600 mm) with alternating white and orange stripes sloping downward at 45 degrees toward the side on which traffic will pass."

80183

WORKING DAYS (BDE)

Effective: January 1, 2002

The Contractor shall complete the work within 25 working days.

80071

Du Page County Prevailing Wage for April 2010

Trade Name	RG	TYP	C	Base	FRMAN	*M-F>8	OSA	OSH	H/W	Pensn	Vac	Trng
ASBESTOS ABT-GEN		ALL		35.200	35.700	1.5	1.5	2.0	9.130	8.370	0.000	0.400
ASBESTOS ABT-MEC		BLD		31.540	0.000	1.5	1.5	2.0	9.670	9.610	0.000	0.520
BOILERMAKER		BLD		43.020	46.890	2.0	2.0	2.0	6.720	9.890	0.000	0.350
BRICK MASON		BLD		39.030	42.930	1.5	1.5	2.0	8.800	10.67	0.000	0.740
CARPENTER		ALL		40.770	42.770	1.5	1.5	2.0	9.840	9.790	0.000	0.490
CEMENT MASON		ALL		38.000	40.000	2.0	1.5	2.0	7.700	14.45	0.000	0.380
CERAMIC TILE FNSHER		BLD		33.600	0.000	2.0	1.5	2.0	6.950	8.020	0.000	0.540
COMMUNICATION TECH		BLD		32.650	34.750	1.5	1.5	2.0	7.650	11.98	0.500	0.490
ELECTRIC PWR EQMT OP		ALL		33.140	42.570	1.5	1.5	2.0	4.750	10.27	0.000	0.250
ELECTRIC PWR GRNDMAN		ALL		25.680	42.570	1.5	1.5	2.0	4.750	7.960	0.000	0.190
ELECTRIC PWR LINEMAN		ALL		39.420	42.570	1.5	1.5	2.0	4.750	12.22	0.000	0.300
ELECTRIC PWR TRK DRV		ALL		26.520	42.570	1.5	1.5	2.0	4.750	8.230	0.000	0.200
ELECTRICIAN		BLD		36.200	39.820	1.5	1.5	2.0	8.650	14.07	3.980	0.580
ELEVATOR CONSTRUCTOR		BLD		46.160	51.930	2.0	2.0	2.0	10.03	9.460	2.770	0.000
FENCE ERECTOR	NE	ALL		30.700	32.200	1.5	1.5	2.0	7.950	8.430	0.000	0.500
FENCE ERECTOR	W	ALL		40.200	42.210	2.0	2.0	2.0	8.140	15.16	0.000	0.230
GLAZIER		BLD		37.000	38.500	1.5	1.5	2.0	7.340	12.05	0.000	0.740
HT/FROST INSULATOR		BLD		42.050	44.550	1.5	1.5	2.0	9.670	10.81	0.000	0.520
IRON WORKER	E	ALL		40.750	42.750	2.0	2.0	2.0	11.00	15.99	0.000	0.300
IRON WORKER	W	ALL		40.200	42.210	2.0	2.0	2.0	8.140	15.16	0.000	0.230
LABORER		ALL		35.200	35.950	1.5	1.5	2.0	9.130	8.370	0.000	0.400
LATHER		ALL		40.770	42.770	1.5	1.5	2.0	9.840	9.790	0.000	0.490
MACHINIST		BLD		42.770	44.770	1.5	1.5	2.0	7.750	8.690	0.650	0.000
MARBLE FINISHERS		ALL		29.100	0.000	1.5	1.5	2.0	8.800	10.67	0.000	0.740
MARBLE MASON		BLD		39.030	42.930	1.5	1.5	2.0	8.800	10.67	0.000	0.740
MATERIAL TESTER I		ALL		25.200	0.000	1.5	1.5	2.0	9.130	8.370	0.000	0.400
MATERIALS TESTER II		ALL		30.200	0.000	1.5	1.5	2.0	9.130	8.370	0.000	0.400
MILLWRIGHT		ALL		40.770	42.770	1.5	1.5	2.0	9.840	9.790	0.000	0.490
OPERATING ENGINEER		BLD	1	45.100	49.100	2.0	2.0	2.0	11.70	8.050	1.900	1.150
OPERATING ENGINEER		BLD	2	43.800	49.100	2.0	2.0	2.0	11.70	8.050	1.900	1.150
OPERATING ENGINEER		BLD	3	41.250	49.100	2.0	2.0	2.0	11.70	8.050	1.900	1.150
OPERATING ENGINEER		BLD	4	39.500	49.100	2.0	2.0	2.0	11.70	8.050	1.900	1.150
OPERATING ENGINEER		BLD	5	48.850	49.100	2.0	2.0	2.0	11.70	8.050	1.900	1.150
OPERATING ENGINEER		BLD	6	46.100	49.100	2.0	2.0	2.0	11.70	8.050	1.900	1.150
OPERATING ENGINEER		BLD	7	48.100	49.100	2.0	2.0	2.0	11.70	8.050	1.900	1.150
OPERATING ENGINEER		HWY	1	43.300	47.300	1.5	1.5	2.0	11.70	8.050	1.900	1.150
OPERATING ENGINEER		HWY	2	42.750	47.300	1.5	1.5	2.0	11.70	8.050	1.900	1.150
OPERATING ENGINEER		HWY	3	40.700	47.300	1.5	1.5	2.0	11.70	8.050	1.900	1.150
OPERATING ENGINEER		HWY	4	39.300	47.300	1.5	1.5	2.0	11.70	8.050	1.900	1.150
OPERATING ENGINEER		HWY	5	38.100	47.300	1.5	1.5	2.0	11.70	8.050	1.900	1.150
OPERATING ENGINEER		HWY	6	46.300	47.300	1.5	1.5	2.0	11.70	8.050	1.900	1.150
OPERATING ENGINEER		HWY	7	44.300	47.300	1.5	1.5	2.0	11.70	8.050	1.900	1.150
ORNAMNTL IRON WORKER	E	ALL		40.200	42.450	2.0	2.0	2.0	8.700	14.04	0.000	0.500
ORNAMNTL IRON WORKER	W	ALL		40.200	42.210	2.0	2.0	2.0	8.140	15.16	0.000	0.230
PAINTER		ALL		39.680	41.680	1.5	1.5	1.5	7.500	7.250	0.000	0.750
PAINTER SIGNS		BLD		31.740	35.640	1.5	1.5	1.5	2.600	2.540	0.000	0.000
PILEDRIVER		ALL		40.770	42.770	1.5	1.5	2.0	9.840	9.790	0.000	0.490
PIPEFITTER		BLD		39.500	41.500	1.5	1.5	2.0	9.700	11.99	0.000	1.310
PLASTERER		BLD		32.000	33.500	1.5	1.5	2.0	6.450	6.770	0.000	0.570
PLUMBER		BLD		39.500	41.500	1.5	1.5	2.0	9.700	11.99	0.000	1.310
ROOFER		BLD		37.000	40.000	1.5	1.5	2.0	7.500	6.020	0.000	0.330
SHEETMETAL WORKER		BLD		41.660	43.660	1.5	1.5	2.0	8.810	10.66	0.000	0.780
SPRINKLER FITTER		BLD		40.500	42.500	1.5	1.5	2.0	8.500	6.850	0.000	0.500
STEEL ERECTOR	E	ALL		40.750	42.750	2.0	2.0	2.0	10.95	15.99	0.000	0.300

STEEL ERECTOR	W	ALL	40.200	42.210	2.0	2.0	2.0	8.140	15.16	0.000	0.230
STONE MASON		BLD	39.030	42.930	1.5	1.5	2.0	8.800	10.67	0.000	0.740
TERRAZZO FINISHER		BLD	35.150	0.000	1.5	1.5	2.0	6.950	10.57	0.000	0.380
TERRAZZO MASON		BLD	39.010	42.010	1.5	1.5	2.0	6.950	11.91	0.000	0.510
TILE MASON		BLD	40.490	44.490	2.0	1.5	2.0	6.950	9.730	0.000	0.610
TRAFFIC SAFETY WRKR		HWY	24.300	25.900	1.5	1.5	2.0	3.780	1.875	0.000	0.000
TRUCK DRIVER		ALL 1	32.550	33.100	1.5	1.5	2.0	6.500	4.350	0.000	0.150
TRUCK DRIVER		ALL 2	32.700	33.100	1.5	1.5	2.0	6.500	4.350	0.000	0.150
TRUCK DRIVER		ALL 3	32.900	33.100	1.5	1.5	2.0	6.500	4.350	0.000	0.150
TRUCK DRIVER		ALL 4	33.100	33.100	1.5	1.5	2.0	6.500	4.350	0.000	0.150
TUCKPOINTER		BLD	39.200	40.200	1.5	1.5	2.0	7.830	10.25	0.000	0.770

Legend:

M-F>8 (Overtime is required for any hour greater than 8 worked each day, Monday through Friday.
OSA (Overtime is required for every hour worked on Saturday)
OSH (Overtime is required for every hour worked on Sunday and Holidays)
H/W (Health & Welfare Insurance)
Pensn (Pension)
Vac (Vacation)
Trng (Training)

Explanations

DUPAGE COUNTY

IRON WORKERS AND FENCE ERECTOR (WEST) - West of Route 53.

The following list is considered as those days for which holiday rates of wages for work performed apply: New Years Day, Memorial/Decoration Day, Fourth of July, Labor Day, Veterans Day, Thanksgiving Day, Christmas Day. Generally, any of these holidays which fall on a Sunday is celebrated on the following Monday. This then makes work performed on that Monday payable at the appropriate overtime rate for holiday pay. Common practice in a given local may alter certain days of celebration such as the day after Thanksgiving for Veterans Day. If in doubt, please check with IDOL.

EXPLANATION OF CLASSES

ASBESTOS - GENERAL - removal of asbestos material/mold and hazardous materials from any place in a building, including mechanical systems where those mechanical systems are to be removed. This includes the removal of asbestos materials/mold and hazardous materials from ductwork or pipes in a building when the building is to be demolished at the time or at some close future date.
ASBESTOS - MECHANICAL - removal of asbestos material from mechanical systems, such as pipes, ducts, and boilers, where the mechanical systems are to remain.

TRAFFIC SAFETY - work associated with barricades, horses and drums used to reduce lane usage on highway work, the installation and removal of temporary lane markings, and the installation and removal of temporary road signs.

CERAMIC TILE FINISHER

The grouting, cleaning, and polishing of all classes of tile, whether for interior or exterior purposes, all burned, glazed or unglazed

products; all composition materials, granite tiles, warning detectable tiles, cement tiles, epoxy composite materials, pavers, glass, mosaics, fiberglass, and all substitute materials, for tile made in tile-like units; all mixtures in tile like form of cement, metals, and other materials that are for and intended for use as a finished floor surface, stair treads, promenade roofs, walks, walls, ceilings, swimming pools, and all other places where tile is to form a finished interior or exterior. The mixing of all setting mortars including but not limited to thin-set mortars, epoxies, wall mud, and any other sand and cement mixtures or adhesives when used in the preparation, installation, repair, or maintenance of tile and/or similar materials. The handling and unloading of all sand, cement, lime, tile, fixtures, equipment, adhesives, or any other materials to be used in the preparation, installation, repair, or maintenance of tile and/or similar materials. Ceramic Tile Finishers shall fill all joints and voids regardless of method on all tile work, particularly and especially after installation of said tile work. Application of any and all protective coverings to all types of tile installations including, but not be limited to, all soap compounds, paper products, tapes, and all polyethylene coverings, plywood, masonite, cardboard, and any new type of products that may be used to protect tile installations, Blastrac equipment, and all floor scarifying equipment used in preparing floors to receive tile. The clean up and removal of all waste and materials. All demolition of existing tile floors and walls to be re-tiled.

COMMUNICATIONS TECHNICIAN

Low voltage installation, maintenance and removal of telecommunication facilities (voice, sound, data and video) including telephone and data inside wire, interconnect, terminal equipment, central offices, PABX, fiber optic cable and equipment, micro waves, V-SAT, bypass, CATV, WAN (wide area networks), LAN (local area networks), and ISDN (integrated system digital network), pulling of wire in raceways, but not the installation of raceways.

MARBLE FINISHER

Loading and unloading trucks, distribution of all materials (all stone, sand, etc.), stocking of floors with material, performing all rigging for heavy work, the handling of all material that may be needed for the installation of such materials, building of scaffolding, polishing if needed, patching, waxing of material if damaged, pointing up, caulking, grouting and cleaning of marble, holding water on diamond or Carborundum blade or saw for setters cutting, use of tub saw or any other saw needed for preparation of material, drilling of holes for wires that anchor material set by setters, mixing up of molding plaster for installation of material, mixing up thin set for the installation of material, mixing up of sand to cement for the installation of material and such other work as may be required in helping a Marble Setter in the handling of all material in the erection or installation of interior marble, slate, travertine, art marble, serpentine, alberene stone, blue stone, granite and other stones (meaning as to stone any foreign or domestic materials as are specified and used in building interiors and exteriors and customarily known as stone in the trade), carrara, sanionyx, vitrolite and similar opaque glass and the laying of all marble tile, terrazzo tile, slate tile and precast tile, steps, risers treads, base, or any other materials that may be used as substitutes

for any of the aforementioned materials and which are used on interior and exterior which are installed in a similar manner.

MATERIAL TESTER I: Hand coring and drilling for testing of materials; field inspection of uncured concrete and asphalt.

MATERIAL TESTER II: Field inspection of welds, structural steel, fireproofing, masonry, soil, facade, reinforcing steel, formwork, cured concrete, and concrete and asphalt batch plants; adjusting proportions of bituminous mixtures.

OPERATING ENGINEER - BUILDING

Class 1. Asphalt Plant; Asphalt Spreader; Autograde; Backhoes with Caisson Attachment; Batch Plant; Benoto (requires Two Engineers); Boiler and Throttle Valve; Caisson Rigs; Central Redi-Mix Plant; Combination Back Hoe Front End-loader Machine; Compressor and Throttle Valve; Concrete Breaker (Truck Mounted); Concrete Conveyor; Concrete Conveyor (Truck Mounted); Concrete Paver Over 27E cu. ft; Concrete Paver 27E cu. ft. and Under: Concrete Placer; Concrete Placing Boom; Concrete Pump (Truck Mounted); Concrete Tower; Cranes, All; Cranes, Hammerhead; Cranes, (GCI and similar Type); Creter Crane; Crusher, Stone, etc.; Derricks, All; Derricks, Traveling; Formless Curb and Gutter Machine; Grader, Elevating; Grouting Machines; Highlift Shovels or Front Endloader 2-1/4 yd. and over; Hoists, Elevators, outside type rack and pinion and similar machines; Hoists, One, Two and Three Drum; Hoists, Two Tugger One Floor; Hydraulic Backhoes; Hydraulic Boom Trucks; Hydro Vac (and similar equipment); Locomotives, All; Motor Patrol; Lubrication Technician; Manipulators; Pile Drivers and Skid Rig; Post Hole Digger; Pre-Stress Machine; Pump Cretes Dual Ram; Pump Cretes: Squeeze Cretes-Screw Type Pumps; Gypsum Bulker and Pump; Raised and Blind Hole Drill; Roto Mill Grinder; Scoops - Tractor Drawn; Slip-Form Paver; Straddle Buggies; Tournapull; Tractor with Boom and Side Boom; Trenching Machines.

Class 2. Boilers; Broom, All Power Propelled; Bulldozers; Concrete Mixer (Two Bag and Over); Conveyor, Portable; Forklift Trucks; Highlift Shovels or Front Endloaders under 2-1/4 yd.; Hoists, Automatic; Hoists, Inside Elevators; Hoists, Sewer Dragging Machine; Hoists, Tugger Single Drum; Rock Drill (Self-Propelled); Rock Drill (Truck Mounted); Rollers, All; Steam Generators; Tractors, All; Tractor Drawn Vibratory Roller; Winch Trucks with "A" Frame.

Class 3. Air Compressor; Combination Small Equipment Operator; Generators; Heaters, Mechanical; Hoists, Inside Elevators; Hydraulic Power Units (Pile Driving, Extracting, and Drilling); Pumps, over 3" (1 to 3 not to exceed a total of 300 ft.); Low Boys; Pumps, Well Points; Welding Machines (2 through 5); Winches, 4 Small Electric Drill Winches; Bobcats (up to and including ¾ cu yd.) .

Class 4. Bobcats and/or other Skid Steer Loaders (other than bobcats up to and including ¾ cu yd.); Oilers; and Brick Forklift.

Class 5. Assistant Craft Foreman.

Class 6. Gradall

Class 7. Mechanics.

OPERATING ENGINEERS - HIGHWAY CONSTRUCTION

Class 1. Asphalt Plant; Asphalt Heater and Planer Combination; Asphalt Heater Scarfire; Asphalt Spreader; Autograder/GOMACO or other similar type machines: ABG Paver; Backhoes with Caisson Attachment; Ballast Regulator; Belt Loader; Caisson Rigs; Car Dumper; Central Redi-Mix Plant; Combination Backhoe Front Endloader Machine, (1 cu. yd. Backhoe Bucket or over or with attachments); Concrete Breaker (Truck Mounted); Concrete Conveyor; Concrete Paver over 27E cu. ft.; Concrete Placer; Concrete Tube Float; Cranes, all attachments; Cranes, Tower Cranes of all types: Creter Crane: Crusher, Stone, etc.; Derricks, All; Derrick Boats; Derricks, Traveling; Dowell Machine with Air Compressor; Dredges; Formless Curb and Gutter Machine; Grader, Elevating; Grader, Motor Grader, Motor Patrol, Auto Patrol, Form Grader, Pull Grader, Subgrader; Guard Rail Post Driver Truck Mounted; Hoists, One, Two and Three Drum; Hydraulic Backhoes; Backhoes with shear attachments; Lubrication Technician; Manipulators; Mucking Machine; Pile Drivers and Skid Rig; Pre-Stress Machine; Pump Cretes Dual Ram; Rock Drill - Crawler or Skid Rig; Rock Drill - Truck Mounted; Rock/Track Tamper; Roto Mill Grinder; Slip-Form Paver; Soil Test Drill Rig (Truck Mounted); Straddle Buggies; Hydraulic Telescoping Form (Tunnel); Tractor Drawn Belt Loader (with attached pusher - two engineers); Tractor with Boom; Tractaire with Attachments; Trenching Machine; Truck Mounted Concrete Pump with Boom; Raised or Blind Hole Drills (Tunnel Shaft); Underground Boring and/or Mining Machines 5 ft. in diameter and over tunnel, etc; Underground Boring and/or Mining Machines under 5 ft. in diameter; Wheel Excavator; Widener (APSCO).

Class 2. Batch Plant; Bituminous Mixer; Boiler and Throttle Valve; Bulldozers; Car Loader Trailing Conveyors; Combination Backhoe Front Endloader Machine (Less than 1 cu. yd. Backhoe Bucket or over or with attachments); Compressor and Throttle Valve; Compressor, Common Receiver (3); Concrete Breaker or Hydro Hammer; Concrete Grinding Machine; Concrete Mixer or Paver 7S Series to and including 27 cu. ft.; Concrete Spreader; Concrete Curing Machine, Burlap Machine, Belting Machine and Sealing Machine; Concrete Wheel Saw; Conveyor Muck Cars (Haglund or Similar Type); Drills, All; Finishing Machine - Concrete; Highlift Shovels or Front Endloader; Hoist - Sewer Dragging Machine; Hydraulic Boom Trucks (All Attachments); Hydro-Blaster; All Locomotives, Dinky; Off-Road Hauling Units (including articulating)/2 ton capacity or more; Non Self-Loading Ejection Dump; Pump Cretes: Squeeze Cretes - Screw Type Pumps, Gypsum Bulker and Pump; Roller, Asphalt; Rotary Snow Plows; Rototiller, Seaman, etc., self-propelled; Scoops - Tractor Drawn; Self-Propelled Compactor; Spreader - Chip - Stone, etc.; Scraper; Scraper - Prime Mover in Tandem (Regardless of Size): Tank Car Heater; Tractors, Push, Pulling Sheeps Foot, Disc, Compactor, etc.; Tug Boats.

Class 3. Boilers; Brooms, All Power Propelled; Cement Supply Tender; Compressor, Common Receiver (2); Concrete Mixer (Two Bag and Over); Conveyor, Portable; Farm-Type Tractors Used for Mowing, Seeding, etc.; Fireman on Boilers; Forklift Trucks; Grouting Machine; Hoists, Automatic; Hoists, All Elevators; Hoists, Tugger Single Drum; Jeep Diggers; Low Boys; Pipe Jacking Machines; Post-Hole Digger; Power Saw, Concrete Power Driven; Pug Mills; Rollers, other than Asphalt; Seed and Straw Blower; Steam Generators; Stump Machine; Winch Trucks with "A" Frame; Work Boats; Tamper-Form-Motor Driven.

Class 4. Air Compressor; Combination - Small Equipment Operator; Directional Boring Machine; Generators; Heaters, Mechanical; Hydraulic Power Unit (Pile Driving, Extracting, or Drilling); Hydro- Blaster; Light Plants, All (1 through 5); Pumps, over 3" (1 to 3 not to exceed a total of 300 ft.); Pumps, Well Points; Tractaire; Welding Machines (2 through 5); Winches, 4 Small Electric Drill Winches.

Class 5. Bobcats (all); Brick Forklifts; Oilers.

Class 6. Field Mechanics and Field Welders

Class 7. Gradall and machines of like nature.

TRUCK DRIVER - BUILDING, HEAVY AND HIGHWAY CONSTRUCTION
Class 1. Two or three Axle Trucks. A-frame Truck when used for transportation purposes; Air Compressors and Welding Machines, including those pulled by cars, pick-up trucks and tractors; Ambulances; Batch Gate Lockers; Batch Hopperman; Car and Truck Washers; Carry-alls; Fork Lifts and Hoisters; Helpers; Mechanics Helpers and Greasers; Oil Distributors 2-man operation; Pavement Breakers; Pole Trailer, up to 40 feet; Power Mower Tractors; Self-propelled Chip Spreader; Skipman; Slurry Trucks, 2-man operation; Slurry Truck Conveyor Operation, 2 or 3 man; Teamsters Unskilled dumpman; and Truck Drivers hauling warning lights, barricades, and portable toilets on the job site.

Class 2. Four axle trucks; Dump Crets and Adgetors under 7 yards; Dumpsters, Track Trucks, Euclids, Hug Bottom Dump Turnapulls or Turnatrailers when pulling other than self-loading equipment or similar equipment under 16 cubic yards; Mixer Trucks under 7 yeards; Ready-mix Plant Hopper Operator, and Winch Trucks, 2 Axles.

Class 3. Five axle trucks; Dump Crets and Adgetors 7 yards and over; Dumpsters, Track Trucks, Euclids, Hug Bottom Dump Turnatrailers or turnapulls when pulling other than self-loading equipment or similar equipment over 16 cubic yards; Explosives and/or Fission Material Trucks; Mixer Trucks 7 yards or over; Mobile Cranes while in transit; Oil Distributors, 1-man operation; Pole Trailer, over 40 feet; Pole and Expandable Trailers hauling material over 50 feet long; Slurry trucks, 1-man operation; Winch trucks, 3 axles or more; Mechanic--Truck Welder and Truck Painter.

Class 4. Six axle trucks; Dual-purpose vehicles, such as mounted crane trucks with hoist and accessories; Foreman; Master Mechanic; Self-loading equipment like P.B. and trucks with scoops on the front.

TERRAZZO FINISHER

The handling of sand, cement, marble chips, and all other materials that may be used by the Mosaic Terrazzo Mechanic, and the mixing, grinding, grouting, cleaning and sealing of all Marble, Mosaic, and Terrazzo work, floors, base, stairs, and wainscoting by hand or machine, and in addition, assisting and aiding Marble, Masonic, and Terrazzo Mechanics.

Other Classifications of Work:

For definitions of classifications not otherwise set out, the Department generally has on file such definitions which are available. If a task to be performed is not subject to one of the classifications of pay set out, the Department will upon being contacted state which neighboring county has such a classification and provide such rate, such rate being deemed to exist by reference in this document. If no neighboring county rate applies to the task, the Department shall undertake a special determination, such special determination being then deemed to have existed under this determination. If a project requires these, or any classification not listed, please contact IDOL at 217-782-1710 for wage rates or clarifications.

LANDSCAPING

Landscaping work falls under the existing classifications for laborer, operating engineer and truck driver. The work performed by landscape plantsman and landscape laborer is covered by the existing classification of laborer. The work performed by landscape operators (regardless of equipment used or its size) is covered by the classifications of operating engineer. The work performed by landscape truck drivers (regardless of size of truck driven) is covered by the classifications of truck driver.

Illinois Department of Transportation

Proposal

Route	VARIOUS
County	DUPAGE
Local Agency	WILLOWBROOK
Section	10-00000-GM-02

RETURN WITH BID

1. Proposal of _____

for the improvement of the above section by the construction of _____

Hot-Mix Asphalt surface removal, Hot-Mix Asphalt surface course, Class D patching, and striping

a total distance of 10100.00 feet, of which a distance of 10100.00 feet ,(1.910 miles) are to be improved.

2. The plans for the proposed work are those prepared by Christopher B. Burke Engineering, LTD and approved by the Department of Transportation on _____
3. The specifications referred to herein are those prepared by the Department of Transportation and designated as "Standard Specifications for Road and Bridge Construction" and the "Supplemental Specifications and Recurring Special Provisions" thereto, adopted and in effect on the date of invitation for bids.
4. The undersigned agrees to accept, as part of the contract, the applicable Special Provisions indicated on the "Check Sheet for Recurring Special Provisions" contained in this proposal.
5. The undersigned agrees to complete the work within 25 working days or by _____ unless additional time is granted in accordance with the specifications.
6. A proposal guaranty in the proper amount, as specified in BLRS Special Provision for Bidding Requirements and Conditions for contract Proposals, will be required. Bid Bonds ☒ will ☐ will not be allowed as proposal guaranties. Accompanying this proposal is either a bid bond if allowed, on Department form BLR 12230 or a proposal guaranty check, complying with the specifications, made payable to: Treasurer of _____

the amount of the check is _____ (_____)

7. In the event that one proposal guaranty check is intended to cover two or more proposals, the amount must be equal to the sum of the proposal guaranties, which would be required for each individual proposal. If the proposal guaranty check is placed in another proposal, it will be found in the proposal for: Section Number _____ .
8. If this proposal is accepted and the undersigned fails to execute a contract and contract bond as required, it is hereby agreed that the Bid Bond or check shall be forfeited to the Awarding Authority.
9. Each pay item should have a unit price and a total price. If no total price is shown or if there is a discrepancy between the product of the unit price multiplied by the quantity, the unit price shall govern. If a unit price is omitted, the total price will be divided by the quantity in order to establish a unit price.
10. A bid will be declared unacceptable if neither a unit price nor a total price is shown.
11. The undersigned firm certifies that it has not been convicted of bribery or attempting to bribe an officer or employee of the State of Illinois, nor has the firm made an admission of guilt of such conduct which is a matter of record, nor has an official, agent, or employee of the firm committed bribery or attempted bribery on behalf of the firm and pursuant to the direction or authorization of a responsible official of the firm. The undersigned firm further certifies that it is not barred from contracting with any unit of State or local government as a result of a violation of State laws prohibiting bid-rigging or bid-rotating.
12. The undersigned submits herewith the schedule of prices on BLR 12222 covering the work to be performed under this contract.

Illinois Department of Transportation

Schedule of Prices

Route	Various
County	DuPage
Local Agency	Willowbrook
Section	10-00000-GM-02

RETURN WITH BID

(For complete information covering these items, see plans and specifications)

Item No.	Items	Unit	Quantity	Unit Price	Total
‡40600100	BITUMINOUS MATERIALS (PRIME COAT)	GAL	2400		
‡40603335	HOT-MIX ASPHALT SURFACE COURSE MIX D, N50	TON	2190		
‡44000155	HOT-MIX ASPHALT SURFACE COURSE REMOVAL, 1 1/2" (PARTIAL WIDTH)	SY	14100		
‡78000650	THERMOPLASTIC PAVEMENT MARKING LINE 24"	FT	165		
‡*N/A	CLASS D PATCHES BINDER SPECIAL, 6"	SY	710		
			Page Total (To be carried forward to Page)		

‡ The Village of Willowbrook reserves the right to increase or decrease this quantity at its discretion

BLR 12222 (Rev. 04/01/09)

Illinois Department of Transportation

Schedule of Prices

Route	Various
County	DuPage
Local Agency	Willowbrook
Section	10-00000-GM-02

RETURN WITH BID

(For complete information covering these items, see plans and specifications)

Item No.	Items	Unit	Quantity	Unit Price	Total

Illinois Department of Transportation

Signatures

Route	Various
County	DuPage
Local Agency	Willowbrook
Section	10-00000-GM-02

RETURN WITH BID

(If an individual)

Signature of Bidder _____

Business Address _____

(If a partnership)

Firm Name _____

Signed By _____

Business Address _____

Insert Names and Addresses of All Partners

(If a corporation)

Corporate Name _____

Signed By _____
President

Business Address _____

Insert Names of Officers

President _____

Secretary _____

Treasurer _____

Attest: _____
Secretary

BLR 12223 (Rev. 7/05)

Illinois Department of Transportation

Local Agency Proposal Bid Bond

Route: Various
County: DuPage
Local Agency: Willowbrook
Section: 10-00000-GM-02

RETURN WITH BID

PAPER BID BOND

WE _____ as PRINCIPAL,

and _____ as SURETY,

are held jointly, severally and firmly bound unto the above Local Agency (hereafter referred to as "LA") in the penal sum of 5% of the total bid price, or for the amount specified in the proposal documents in effect on the date of invitation for bids whichever is the lesser sum. We bind ourselves, our heirs, executors, administrators, successors, and assigns, jointly pay to the LA this sum under the conditions of this instrument.

WHEREAS THE CONDITION OF THE FOREGOING OBLIGATION IS SUCH that, the said PRINCIPAL is submitting a written proposal to the LA acting through its awarding authority for the construction of the work designated as the above section.

THEREFORE if the proposal is accepted and a contract awarded to the PRINCIPAL by the LA for the above designated section and the PRINCIPAL shall within fifteen (15) days after award enter into a formal contract, furnish surety guaranteeing the faithful performance of the work, and furnish evidence of the required insurance coverage, all as provided in the "Standard Specifications for Road and Bridge Construction" and applicable Supplemental Specifications, then this obligation shall become void; otherwise it shall remain in full force and effect.

IN THE EVENT the LA determines the PRINCIPAL has failed to enter into a formal contract in compliance with any requirements set forth in the preceding paragraph, then the LA acting through its awarding authority shall immediately be entitled to recover the full penal sum set out above, together with all court costs, all attorney fees, and any other expense of recovery.

IN TESTIMONY WHEREOF, the said PRINCIPAL and the said SURETY have caused this instrument to be signed by their respective officers this _____ day of _____

Principal

_____ (Company Name)

By: _____ (Signature and Title)

_____ (Company Name)

By: _____ (Signature and Title)

(If PRINCIPLE is a joint venture of two or more contractors, the company names, and authorized signatures of each contractor must be affixed.)

Surety

_____ (Name of Surety)

By: _____ (Signature of Attorney-in-Fact)

STATE OF ILLINOIS,

COUNTY OF _____

I. _____, a Notary Public in and for said county,

do hereby certify that _____

(Insert names of individuals signing on behalf of PRINCIPAL & SURETY)

who are each personally known to me to be the same persons whose names are subscribed to the foregoing instrument on behalf of PRINCIPAL and SURETY, appeared before me this day in person and acknowledged respectively, that they signed and delivered said instruments as their free and voluntary act for the uses and purposes therein set forth.

Given under my hand and notarial seal this _____ day of _____

My commission expires _____ _____ (Notary Public)

ELECTRONIC BID BOND

☐ **Electronic bid bond is allowed (box must be checked by LA if electronic bid bond is allowed)**

The Principal may submit an electronic bid bond, in lieu of completing the above section of the Proposal Bid Bond Form. By providing an electronic bid bond ID code and signing below, the Principal is ensuring the identified electronic bid bond has been executed and the Principal and Surety are firmly bound unto the LA under the conditions of the bid bond as shown above. (If PRINCIPAL is a joint venture of two or more contractors, an electronic bid bond ID code, company/Bidder name title and date must be affixed for each contractor in the venture.)

Electronic Bid Bond ID Code

_____ (Company/Bidder Name)

_____ (Signature and Title)

_____ Date

BLR 12230 (Rev. 7/05

Illinois Department of Transportation
Bureau of Construction
2300 South Dirksen Parkway/Room 322
Springfield, Illinois 62764

Affidavit of Availability
For the Letting of _____

Instructions: Complete this form by either typing or using black ink. "Authorization to Bid" will not be issued unless both sides of this form are completed in detail. Use additional forms as needed to list all work.

Part I. Work Under Contract

List below all work you have under contract as either a prime contractor or a subcontractor. It is required to include all pending low bids not yet awarded or rejected. In a joint venture, list only that portion of the work which is the responsibility of your company. The uncompleted dollar value is to be based upon the most recent engineer's or owners estimate, and must include work subcontracted to others. If no work is contracted, show **NONE.**

	1	2	3	4	Awards Pending	
County and Section Number						
Contract With						
Estimated Completion Date						
Total Contract Price						Accumulated Totals
Uncompleted Dollar Value if Firm is the Prime Contractor						
Uncompleted Dollar Value if Firm is the Subcontractor						
				Total Value of All Work		

Part II. Awards Pending and Uncompleted Work to be done with your own forces.

List below the uncompleted dollar value of work for each contract and awards pending to be completed with your own forces. All work subcontracted to others will be listed on the reverse of this form. In a joint venture, list only that portion of the work to be done by your company. If no work is contracted, show NONE.

						Accumulated Totals
Earthwork						
Portland Cement Concrete Paving						
HMA Plant Mix						
HMA Paving						
Clean & Seal Cracks/Joints						
Aggregate Bases & Surfaces						
Highway, R.R. and Waterway Structures						
Drainage						
Electrical						
Cover and Seal Coats						
Concrete Construction						
Landscaping						
Fencing						
Guardrail						
Painting						
Signing						
Cold Milling, Planning & Rotomilling						
Demolition						
Pavement Markings (Paint)						
Other Construction (List)						
Totals						

Disclosure of this information is **REQUIRED** to accomplish the statutory purpose as outlined in the "Illinois Procurement Code." Failure to comply will result in non-issuance of an "Authorization To Bid." This form has been approved by the State Forms Management Center.

Part III. Work Subcontracted to Others.

For each contract described in Part I, list all the work you have subcontracted to others.

	1	2	3	4	Awards Pending
Subcontractor					
Type of Work					
Subcontract Price					
Amount Uncompleted					
Subcontractor					
Type of Work					
Subcontract Price					
Amount Uncompleted					
Subcontractor					
Type of Work					
Subcontract Price					
Amount Uncompleted					
Subcontractor					
Type of Work					
Subcontract Price					
Amount Uncompleted					
Subcontractor					
Type of Work					
Subcontract Price					
Amount Uncompleted					
Total Uncompleted					

I, being duly sworn, do hereby declare that this affidavit is a true and correct statement relating to ALL uncompleted contracts of the undersigned for Federal, State, County, City and private work, including ALL subcontract work, ALL pending low bids not yet awarded or rejected and ALL estimated completion dates.

Subscribed and sworn to before me

this _____ day of _____ , _____

Type or Print Name _____

Officer or Director Title

Signed _____

_____

Notary Public

My commission expires _____

Company _____

(Notary Seal)

Address _____

_____

VILLAGE OF WILLOWBROOK

BOARD MEETING
AGENDA ITEM - HISTORY/COMMENTARY

ITEM TITLE:
A RESOLUTION WAIVING THE COMPETITIVE BIDDING PROCESS AND AUTHORIZING THE PRESIDENT AND VILLAGE CLERK TO ACCEPT A PROPOSAL FOR THE COMPLETION OF THE ADAMS STREET DRAINAGE IMPROVEMENT PROJECT – SCOTT CONTRACTING, INC.

AGENDA NO. 14

AGENDA DATE: 04/12/10

STAFF REVIEW: Tim Halik, Director of Municipal Services **SIGNATURE:** Tim Halik

LEGAL REVIEW: N/A **SIGNATURE:** _____

RECOMMENDED BY VILLAGE ADMIN.: **SIGNATURE:** Mary E. Ori

REVIEWED & APPROVED BY COMMITTEE: **YES** ☒ on February 8, 2010 **NO** ☐ **N/A** ☐

ITEM HISTORY (PREVIOUS VILLAGE BOARD REVIEWS, ACTIONS RELATED TO THIS ITEM, PERTINENT HISTORY)

During the Board budget workshop, staff reviewed a recently identified drainage problem that affects the intersection of Adams Street and Tanglewood Lane. Stormwater will tend to accumulate on the Adams Street pavement to the extent that a traffic hazard is created. In the past, public works crews have measured the depth of inundation at 24" (please see attached photograph taken of the most recent occurrence on October 30, 2009). At these times, public works crews must post signage warning motorists of the hazard, and have installed pumps to expedite the drain-down of the roadway. Once the stormwater receded, the underground storm lines are typically power jetted to ensure there are no blockages, creating substantial expense.

The Village engineer was asked to review the storm drainage route and develop a solution. The most economical solution was determined to be a bypass sewer that would route stormwater directly into Lake Willoway, as originally intended. Staff obtained proposals from two (2) of our regular underground contractors to complete the scope of work:

Vendor	Proposal
Scott Contracting Inc., St. Charles	**$6,475.00**
Sunset Sewer & Water, Inc., Beecher	$10,685.00

To help reduce project costs, the Village will provide the required bedding stone for the installation, and will haul away excavated spoils from the project using Village equipment. The Village will also arrange for the required landscape restoration at a later date after the trench has adequately settled.

ITEM COMMENTARY (BACKGROUND, DISCUSSION, RECOMMENDATIONS, ETC.)

Funds to complete this project are available within the FY 09/10 Budget. Staff would recommend that the Village Board accept the low proposal from Scott Contracting, Inc. to complete this project.

FUND	ACCOUNT	DESCRIPTION	UNEXPENDED
Public Work	01-35-750-289	Storm Water – Site Improve.	$18,176.50

ACTION PROPOSED:
Adopt Resolution.

RESOLUTION NO. 10-R-_____

A RESOLUTION WAIVING THE COMPETITIVE BIDDING PROCESS AND AUTHORIZING THE PRESIDENT AND VILLAGE CLERK TO ACCEPT A PROPOSAL FOR THE COMPLETION OF THE ADAMS STREET DRAINAGE IMPROVEMENT PROJECT – SCOTT CONTRACTING, INC.

BE IT RESOLVED by the President and Board of Trustees of the Village of Willowbrook, DuPage County, Illinois, that the competitive bidding process be waived and that the President and Village Clerk be and the same are hereby authorized and directed to accept the proposal from Scott Contracting, Inc. for the completion of the Adams Street Drainage Improvement Project in an amount not to exceed $6,475.00, as set forth in the proposal attached hereto as Exhibit "A" which is, by this reference, expressly incorporated herein.

ADOPTED and APPROVED this 12th day of April, 2010.

APPROVED:

_____
Village President

ATTEST:

_____
Village Clerk

ROLL CALL VOTE: AYES:_____

NAYS:_____

ABSTENTIONS:_____

ABSENT:_____

Scott Contracting, Inc.
7N714 Fielding Ct.
St. Charles, IL 60175
847-658-8441
fax 630-513-2924

Proposal

DATE	ESTIMATE NO.
3/19/2010	335

NAME / ADDRESS
Village of Willowbrook 7760 Quincy St. Willowbrook, IL 60527

RECEIVED
MAR 19 2010
VILLAGE OF WILLOWBROOK
MUNICIPAL SERVICES DEPT.

P.O. NO.	TERMS
	Net 30

ITEM	DESCRIPTION	QTY	RATE	TOTAL
1	Supply and install 285' of 12" HDPE N12 storm sewer. Price includes all labor and equiptment. Connect storm sewer to the existing structure and plug the existing pipe to the east. All stone to be supplied by the Village. All excess dirt to be hauled by the Village. Rough grade the work area to be ready for landscaping.	1	6,475.00	6,475.00
2	10" pipe would be a $300 credit.	285	0.00	0.00
			TOTAL	$6,475.00

The above proposal is accepted. You are authorized to do the work as specified.

SIGNATURE & Date _____

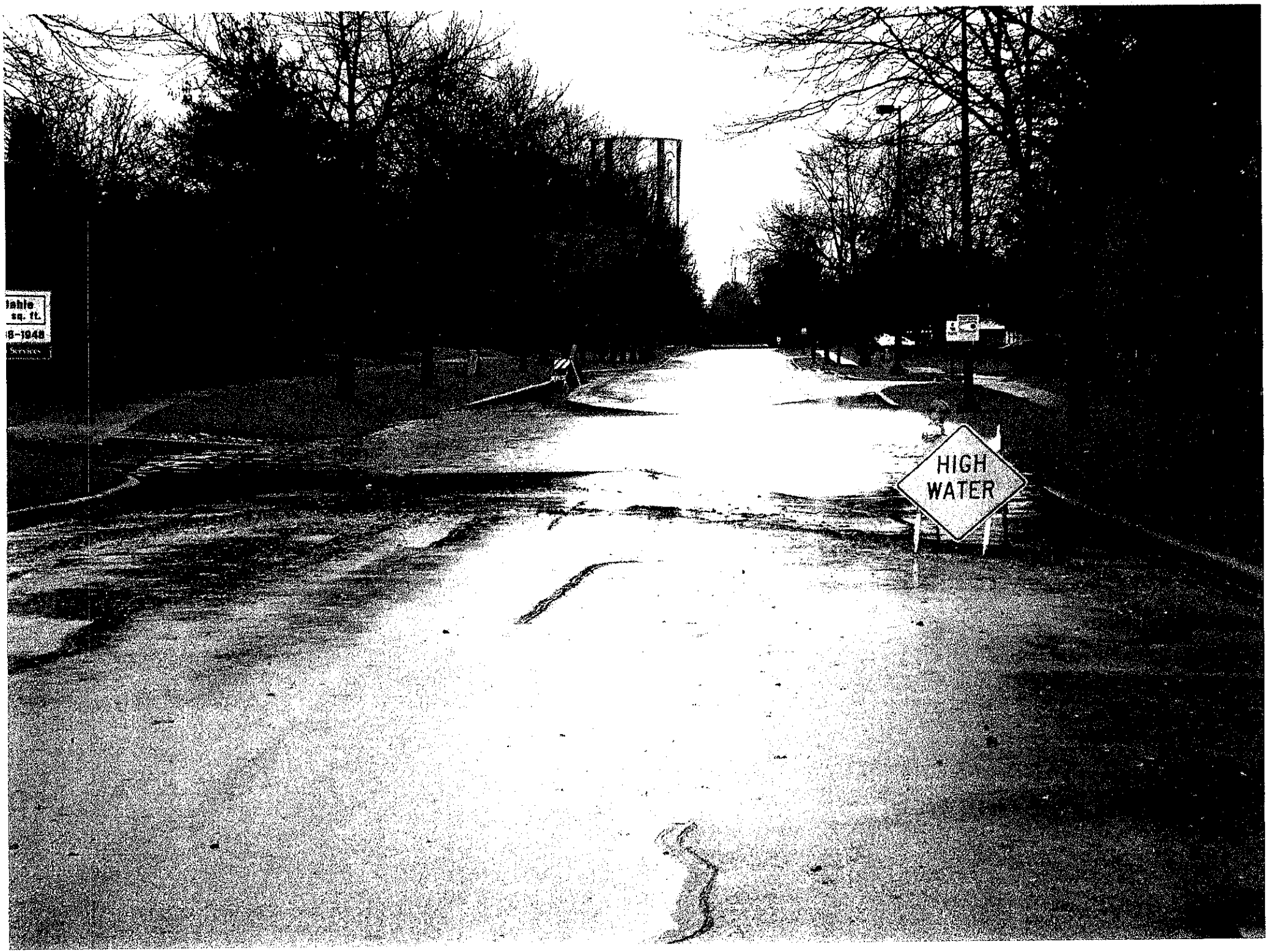
HIGH
WATER

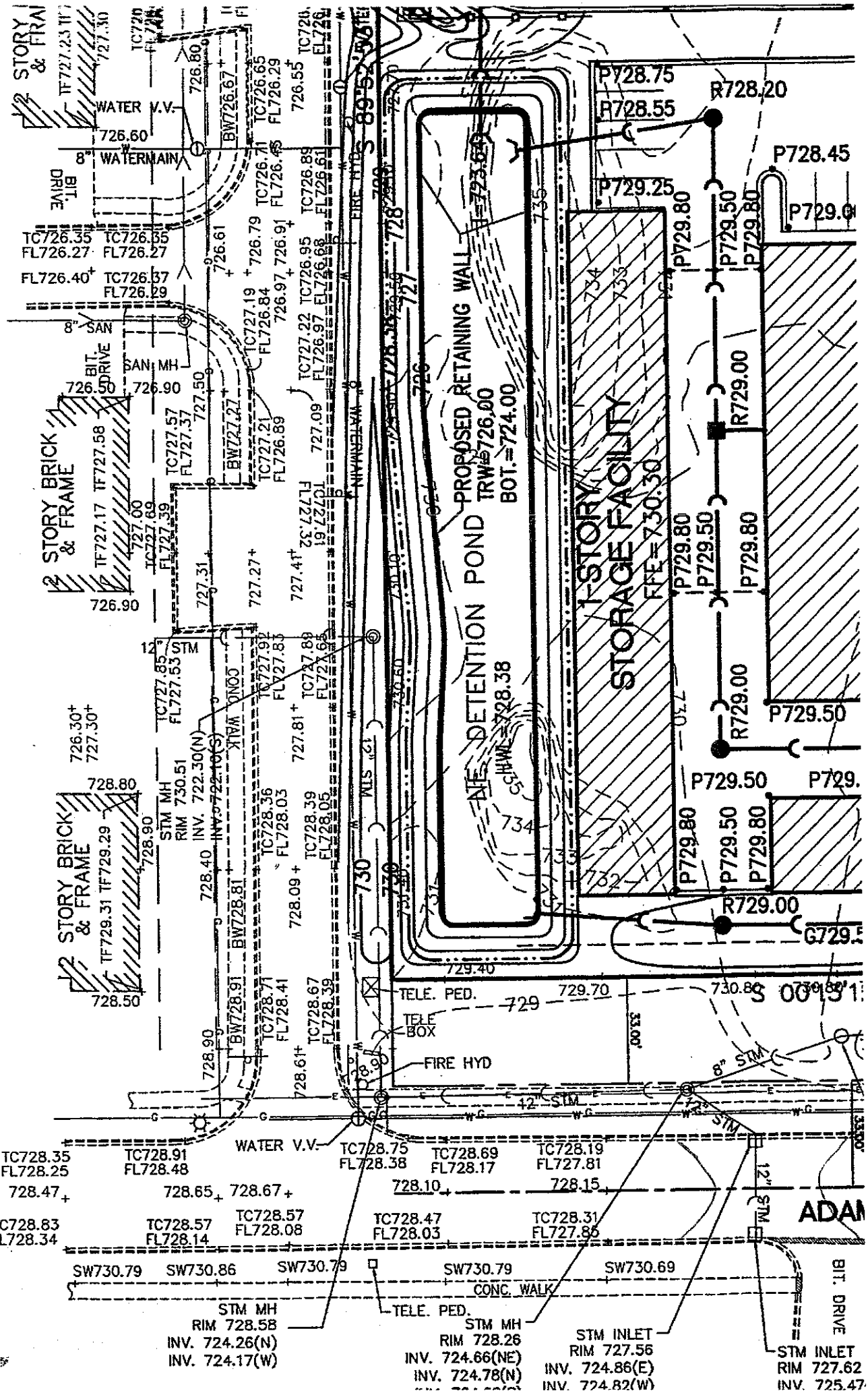
PROPOSED RETAINING WALL
TRW=726.00
BOT.=724.00
DETENTION POND
1 STORY STORAGE FACILITY
FFE=730.30
2 STORY BRICK & FRAME
WATER V.V.
8" WATERMAIN
8" SAN
SAN MH
12" STM
CONC. WALK
STM MH
RIM 730.51
INV. 722.30(N)
TELE. PED.
TELE BOX
FIRE HYD
BIT. DRIVE
S 89°52'
S 00°31'
ADAM
STM MH
RIM 728.58
INV. 724.26(N)
INV. 724.17(W)
STM MH
RIM 728.26
INV. 724.66(NE)
INV. 724.78(N)
STM INLET
RIM 727.56
INV. 724.86(E)
INV. 724.82(W)
STM INLET
RIM 727.62
INV. 725.47

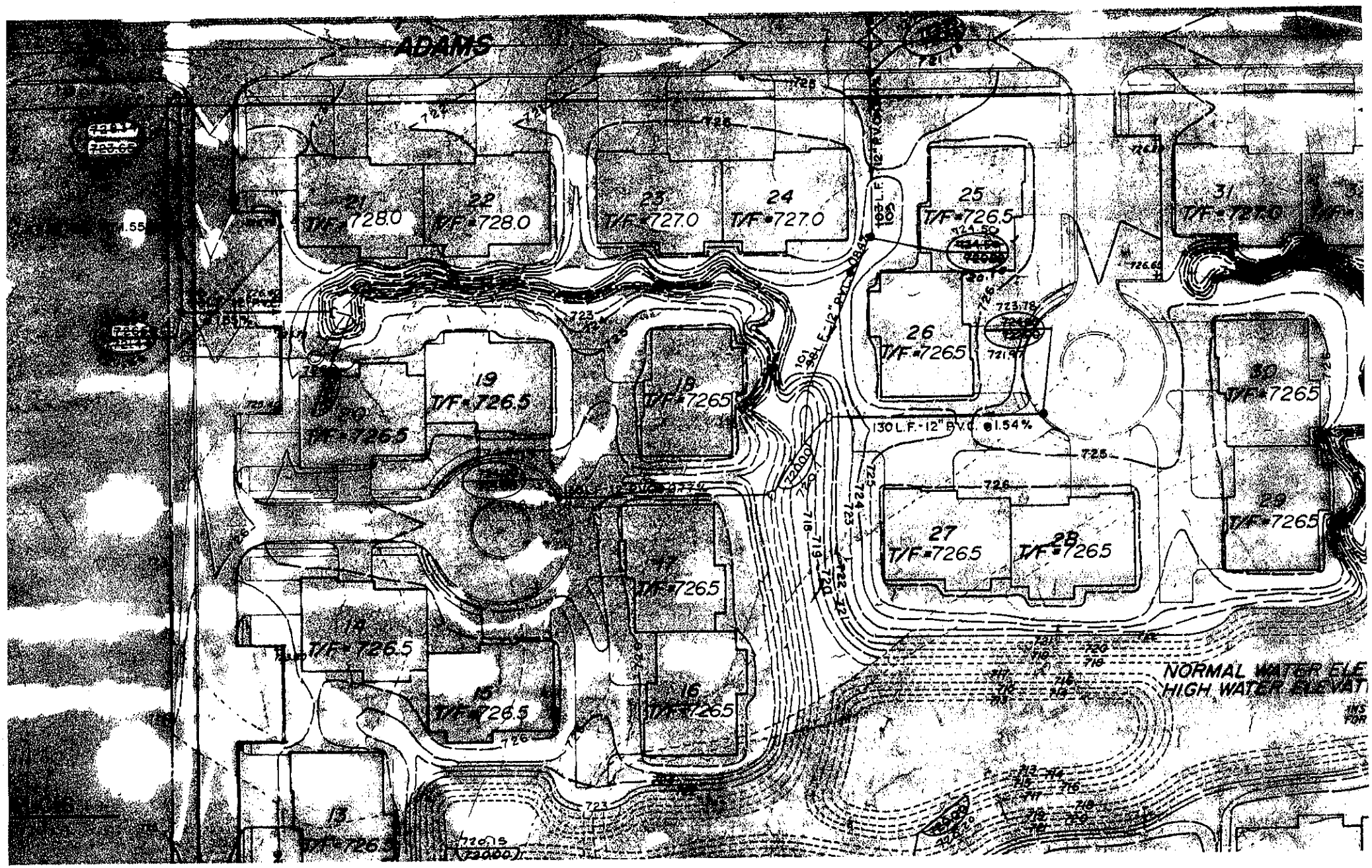
ADAMS
21
T/F=728.0
22
T/F=728.0
23
T/F=727.0
24
T/F=727.0
25
T/F=726.5
31
T/F=727.0
26
T/F=7265
30
T/F=7265
29
T/F=7265
27
T/F=7265
28
T/F=7265
19
T/F=726.5
18
T/F=7265
17
T/F=7265
14
T/F=726.5
15
T/F=726.5
16
T/F=7265
13
T/F=726.5
130 L.F.-12" P.V.C. @1.54%
NORMAL WATER ELE
HIGH WATER ELEVAT

VILLAGE OF WILLOWBROOK

BOARD MEETING
AGENDA ITEM - HISTORY/COMMENTARY

ITEM TITLE:

A RESOLUTION AUTHORIZING THE PRESIDENT AND VILLAGE CLERK TO ENTER INTO AN EMPLOYMNT AGREEMENT BETWEEN THE VILLAGE OF WILLOWBROOK AND MARK SHELTON AS ITS CHIEF OF POLICE

AGENDA NO. 15

AGENDA DATE: 04/12/10

STAFF REVIEW: **SIGNATURE:**

LEGAL REVIEW: **SIGNATURE:**

RECOMMENDED BY VILLAGE ADMIN.: **SIGNATURE:**

REVIEWED & APPROVED BY COMMITTEE: **YES** ☐ **NO** ☐ **N/A** ☒

ITEM HISTORY (PREVIOUS VILLAGE BOARD REVIEWS, ACTIONS RELATED TO THIS ITEM, OTHER PERTINENT HISTORY)

The attached agreement provides terms for the employment of the Chief of Police. The employee has given final approval of the agreement.

ITEM COMMENTARY (BACKGROUND, DISCUSSION, RECOMMENDATIONS, ETC.)

ACTION PROPOSED:

Adopt the resolution.

RESOLUTION NO. 10-R-

A RESOLUTION AUTHORIZING THE PRESIDENT AND VILLAGE CLERK TO ENTER INTO AN EMPLOYMENT AGREEMENT BETWEEN THE VILLAGE OF WILLOWBROOK AND MARK SHELTON AS ITS CHIEF OF POLICE

WHEREAS, the Village of Willowbrook has retained the services of Mark Shelton as its Chief of Police; and,

WHEREAS, the President and Board of Trustees of the Village of Willowbrook have determined that it is in the best interests of the Village to enter into an Employment Agreement with Mark Shelton to define the services to be rendered, and the compensation to be paid for same, all in accordance with the copy of the Agreement attached hereto as Exhibit "A" and by this reference incorporated herein.

NOW, THEREFORE, BE IT RESOLVED by the President and Board of Trustees of the Village of Willowbrook, DuPage County, Illinois, that the President is hereby authorized to execute and the Village Clerk is hereby directed to attest to the Agreement appended hereto as Exhibit "A", defining the Village's employment relationship with Mark Shelton as its Chief of Police.

ADOPTED AND APPROVED on this 12th day of April 2010.

APPROVED:

_____

Village President

ATTEST:

_____

Village Clerk

ROLL CALL VOTE: **AYES:** _____

NAYS: _____

ABSTENTIONS: _____

ABSENT: _____

EXHIBIT "A"

EMPLOYMENT AGREEMENT

THIS AGREEMENT, made and entered into effective as of the 12th day of April, 2010, by and between the VILLAGE OF WILLOWBROOK, an Illinois municipal corporation (sometimes hereinafter referred to as the "VILLAGE") and MARK SHELTON, a sworn member of the Willowbrook Police Department (sometimes hereinafter referred to as the "EMPLOYEE"):

WITNESSETH:

WHEREAS, the VILLAGE, to the extent permitted by law, desires to employ the services of EMPLOYEE as the Chief of Police of the VILLAGE, as such position is provided for by the Village Code of the Village of Willowbrook; and,

WHEREAS, it is the desire of the VILLAGE to provide certain benefits, to establish certain conditions of employment and to set working conditions of said EMPLOYEE as the Chief of Police; and,

WHEREAS, the purposes of this Agreement are:

1. To secure and retain the services of EMPLOYEE and to provide inducement for him to remain in such employment;

2. To make possible full work productivity by assuring EMPLOYEE'S morale and peace of mind with respect to future security;

3. To act as a deterrent against malfeasance or dishonesty for personal gain on the part of the EMPLOYEE;

4. To provide a just means of terminating EMPLOYEE'S services with or without cause as the VILLAGE may desire; and,

WHEREAS, EMPLOYEE desires to be employed as Chief of Police of the VILLAGE upon the terms and conditions hereinafter set forth.

NOW, THEREFORE, in consideration of the foregoing recitals and of the covenants and conditions hereinafter contained, the adequacy and sufficiency of which the parties hereto hereby stipulate, the parties hereto agree as follows:

SECTION ONE: **EMPLOYMENT:** Subject to the terms of this Agreement, the VILLAGE agrees to appoint the EMPLOYEE, a sworn member of the Willowbrook Police Department, to the office of Chief of Police of the VILLAGE to perform the functions and duties of said office in accordance with the Village Code of the Village of Willowbrook and any other ordinances, resolutions, rules and regulations, policies of the VILLAGE, and professional codes of ethics in effect as of the effective date of this Agreement, and those hereafter adopted or instituted by the VILLAGE as the case may be, pertaining to the duties and responsibilities of the Chief of Police. The EMPLOYEE shall periodically attend such meetings and make such written and oral reports and recommendations as the President, Village Board or Village Administrator may require. He shall report to and follow such directions as the Village President or Village Administrator may from time to time provide. He shall maintain regular office hours as may from time to time be approved by the Village President.

SECTION TWO: TERM, EXTENSION & REVERSION : The term of this Agreement shall commence effective as of April 12, 2010, and shall terminate on the last day of the term of the incumbent Village President unless sooner terminated by operation of law or as otherwise provided for in this Agreement. Notwithstanding the conclusion of the said term of employment solely by reason of the expiration of the incumbent Village President's full term of office, the parties hereby agree that the said term of employment hereunder may, by an executed, written Addendum to this Agreement, be extended for one additional period not to exceed sixty (60) calendar days to allow for their possible execution of a new Employment Agreement. In the event that no such new Agreement is reached and entered into by the parties within said additional period, then the VILLAGE'S employment of the EMPLOYEE as its Chief of Police shall, without more, cease and terminate; ***provided,*** that should the EMPLOYEE hereafter voluntarily resign, be terminated by the VILLAGE ***without cause*** or be otherwise terminated by the VILLAGE solely by reason of the expiration of the term of this Agreement prior to having obtained eligibility to retire on pension, he shall then, if he so desires, revert to, and be established in, the Commander rank he held prior to his previous appointment as Deputy Chief of Police and, thereafter, he shall be entitled to all the benefits and emoluments of such prior rank without regard to whether a vacancy then exists in such rank; and, ***provided further,*** that should the EMPLOYEE hereafter be terminated by the VILLAGE ***with cause***, for the commission of such acts or omissions as would justify his termination as a sworn police officer under Illinois common law, he shall then forfeit his position as Chief of Police, together with any rights or privileges attendant thereto, including the right to revert to his former Commander rank.

SECTION THREE: TERMINATION AND SEVERANCE PAY:

A. It is expressly understood and agreed that the employment status of EMPLOYEE is not subject to the jurisdiction of Title 12, Chapter 2, of the Village Code of the Village of Willowbrook and it is further expressly understood and agreed that the employment status of EMPLOYEE is not subject to the jurisdiction of the Board of Police Commissioners of the Village of Willowbrook.

B. Notwithstanding any provision in this Agreement to the contrary, the VILLAGE shall have the absolute right to terminate the services of the EMPLOYEE with or without cause at any time and for any reason whatsoever, and without any due process hearing that might be required by law or otherwise, subject only to subparagraph C of this Section Three.

For the purposes of this paragraph B, the following events shall be deemed to be a termination of the services of the EMPLOYEE on the day of such occurrence:

1. Should the VILLAGE expressly terminate or otherwise remove the EMPLOYEE from his position or substantially all of his responsibilities of Chief of Police;
2. Should the VILLAGE, without the EMPLOYEE'S consent, at any time during the term of this Agreement, reduce the salary or other financial benefits of the EMPLOYEE in a greater percentage than that applicable across the board for all VILLAGE employees;
3. Should the VILLAGE, upon the written demand of the EMPLOYEE, fail or refuse to comply with any terms of this Agreement; or,

4. Should the EMPLOYEE resign following a recommendation by the corporate authorities that he resign.

5. Should the VILLAGE fail to execute an Extension Addendum to this Agreement and a new Employment Agreement following the expiration of the incumbent President's full term of office in accordance with the terms, conditions and provisions of SECTION TWO hereinabove.

Unless the EMPLOYEE is terminated **"with cause"**, he shall have the right, if he so elects, to revert to his former rank of Commander. In the event of such a **"with cause"** termination, **"cause"** shall be for all such acts or omissions of the EMPLOYEE as would justify his termination as a sworn police officer under Illinois common law.

C. If the EMPLOYEE is terminated by the VILLAGE pursuant to the provisions of subparagraph B above and he elects not to revert to his prior Commander rank, the VILLAGE agrees to pay EMPLOYEE as severance pay, within thirty (30) days of termination, a lump sum cash payment equal to three (3) months of the EMPLOYEE'S annual salary at the time of termination. In addition, the VILLAGE agrees to maintain, in full force and effect and to the extent permitted by law, all benefits identified in Sections Eight and Ten for a period of three (3) months from and after the date of termination. Alternatively, should the EMPLOYEE elect to revert to his prior Commander rank following his termination by the VILLAGE pursuant to the provisions of subparagraph B above, the VILLAGE shall not be obligated to pay the said severance pay and benefits otherwise provided for herein.

Notwithstanding the foregoing, the VILLAGE shall also not be obligated to pay the severance pay and severance benefits provided for herein if any such termination is preceded by six (6) months prior written notice to the EMPLOYEE by the VILLAGE. The severance and benefit provisions of this subparagraph C do not apply should the President and Board of Trustees elect not to renew this Agreement.

D. Notwithstanding the provisions contained in subparagraphs B and C above, the President and Board of Trustees of the VILLAGE shall have the right to terminate the EMPLOYEE should the EMPLOYEE abandon his position. The term "abandon" shall, for purposes of this subparagraph, mean actions by the EMPLOYEE evidencing his voluntary, intentional relinquishment of the position. The term "abandon" shall not mean the EMPLOYEE'S:

- Inability to perform the duties and responsibilities of his position due to illness or injury
- Refusal to take any action or perform any duty or responsibility of his position due to his good faith belief that doing so would violate a legal, moral or ethical obligation
- Unauthorized or unexcused absence from Village Hall, unless such absence exceeds three (3) consecutive days

In addition, this subparagraph is not intended to authorize the termination of the EMPLOYEE due to personality conflict or differences in management style or philosophy. In the event of termination pursuant to this subparagraph D, the VILLAGE shall not be obliged to pay the severance pay nor provide the severance benefits provided

herein; additionally, the EMPLOYEE, having abandoned his office, shall have no right to revert to his prior rank.

E. Notwithstanding the provisions contained in subparagraphs B and C above, the President and Board of Trustees of the VILLAGE shall have the right to terminate the EMPLOYEE should the EMPLOYEE be convicted of an illegal act involving personal gain to himself or otherwise, if, in the opinion of the VILLAGE, such conviction would have an adverse effect upon the VILLAGE. In the event of such a termination, the VILLAGE shall not be obliged to pay the severance pay nor provide the benefits provided herein; further, the EMPLOYEE, having been so convicted, shall have no right to revert to his prior rank.

In the event the EMPLOYEE shall be indicted or arrested for the violation of any criminal law or statute which, in the opinion of the President and Board of Trustees of the VILLAGE, would reflect unfavorably upon said VILLAGE, or in any way interfere with his ability to discharge the duties of his position, then the VILLAGE may request and, upon such a request, the EMPLOYEE shall accept a leave of absence without pay pending a final determination of the criminal charges brought against said EMPLOYEE. Should the EMPLOYEE be cleared of all wrongdoing in connection therewith, he shall be restored to his position and all amounts of pay withheld shall be promptly paid to him. Should the EMPLOYEE plead or be found guilty of any such violation, or should any such violation be dismissed or otherwise compromised in consideration for testimony or other evidence, then he shall forfeit his position as the Chief of Police of the VILLAGE OF WILLOWBROOK together with any right or privilege attendant thereto, including the forfeiture of any back pay which may have been

withheld subsequent to his indictment or arrest and including the forfeiture of the right to revert to his prior rank.

F. Notwithstanding any provision in this Agreement to the contrary, the EMPLOYEE shall have the right to voluntarily resign any time from his position with the VILLAGE. In the event EMPLOYEE voluntarily resigns from his position with the VILLAGE before the expiration of this Agreement, the EMPLOYEE shall give the VILLAGE thirty (30) days prior written notice of his intent to resign. Further, having voluntarily resigned, the EMPLOYEE shall not be entitled to severance pay or severance benefits as set forth in subparagraph C above but he can elect to revert to his prior rank.

G. Notwithstanding the provisions contained in subparagraphs B and C above, the President and Board of Trustees of the VILLAGE shall have the right to terminate the EMPLOYEE should any complaint of sexual harassment filed against the EMPLOYEE during the term of this Agreement be substantiated by the Village Board.

In the event of such termination, the VILLAGE shall not be obligated to pay the severance pay nor provide the benefits provided in this Agreement; further, in such an event, the EMPLOYEE shall have no right to revert to his prior rank.

H. The EMPLOYEE expressly waives any rights to a due process hearing with respect to any termination or other disciplinary action, whether required by law or otherwise, including those provided by the Village Code.

I. The EMPLOYEE acknowledges that he has had the opportunity to review the terms of this Agreement with an attorney of his own choosing, prior to the execution of this Agreement.

SECTION FOUR: **SALARY:** The VILLAGE agrees to pay EMPLOYEE for services rendered pursuant to this Agreement an annual base salary of ONE HUNDRED SIXTEEN THOUSAND FIVE HUNDRED DOLLARS EXACTLY ($116,500.00) per year, payable in installments at the same pay periods other employees of the VILLAGE are paid, provided that the VILLAGE agrees to review and consider increasing EMPLOYEE'S base salary in accordance with the salary guidelines set forth in the "Village Personnel Manual" adopted by the President and Board of Trustees.

SECTION FIVE: **EXTENT OF SERVICES - OUTSIDE ACTIVITIES:**

EMPLOYEE shall devote his entire time, attention and energies to the VILLAGE'S business and shall not during the term of this Agreement be engaged in any other business, teaching or consulting activity whether or not such activity is pursued for gain, profit or other pecuniary advantage, without the expressed prior approval of the Village President.

SECTION SIX: **AUTOMOBILE:** EMPLOYEE'S duties require that he shall have the exclusive and unrestricted use at all time during his employment with the VILLAGE of an automobile which shall be provided to him by the VILLAGE. Personal use of the automobile shall be consistent with the "Personnel Manual" as amended from time to time. The particular vehicle to be made available to the EMPLOYEE shall be within the discretion of the Village President.

The VILLAGE shall be responsible for paying for liability, property damage and comprehensive insurance, as well as for the purchase, operation, maintenance, repair and regular replacement of said automobile.

SECTION SEVEN: **EMPLOYEE'S EXPENSES:** The VILLAGE shall annually appropriate and budget an amount of money for the purpose of defraying the hereinafter itemized expenses of the Chief of Police, including but not limited to, business expenses, professional dues and subscriptions, educational expenses, travel expenses, registration fees, lodging and meals, etc., consistent with the rules and regulations contained in the VILLAGE'S "Personnel Manual". In addition, the VILLAGE agrees to provide EMPLOYEE with an annual clothing allowance for duty-related apparel in the amount of Seven Hundred Fifty Dollars ($750.00)

SECTION EIGHT: **BENEFITS:** The VILLAGE agrees to provide EMPLOYEE and his dependents all benefits on the same basis and to the same extent such benefits are enjoyed by all other management personnel of the Village of Willowbrook, including, but not limited to, insurance (life, accident and sickness disability income benefits, major medical and dependents coverage, hospitalization, surgical and comprehensive medical, etc.), sick leave, compensatory time, vacation leave, etc., consistent with the policies established by the VILLAGE in its "Personnel Manual".

SECTION NINE: **PERFORMANCE EVALUATION:** The Village President shall establish an annual goal setting session and an annual evaluation session consistent with the "Personnel Evaluation Handbook" adopted by the President and Board of Trustees.

SECTION TEN: **RETIREMENT:** The EMPLOYEE is a member of the Willowbrook Police Officers Pension Fund. Contributions will continue during term of employment of the EMPLOYEE by the VILLAGE as provided by law.

SECTION ELEVEN: **VACATION & SICK LEAVE:** EMPLOYEE shall be entitled to all vacation and sick leave as provided for by the "Personnel Manual" of the VILLAGE OF WILLOWBROOK.

SECTION TWELVE: **RESIDENCY:** It is hereby acknowledged that the EMPLOYEE currently resides at 24200 Norwood Drive, Plainfield, Illinois, 60585. The VILLAGE expressly acknowledges that EMPLOYEE'S current residence is of such proximity to the VILLAGE that the EMPLOYEE can adequately perform all the duties of his office. During the term of this Agreement and any extensions thereof, the VILLAGE agrees that the EMPLOYEE'S current residence shall be deemed to satisfy any future residency requirements that the VILLAGE may adopt.

Notwithstanding the foregoing, the EMPLOYEE agrees not to relocate his permanent residence a further distance from the corporate limits of the VILLAGE OF WILLOWBROOK than his current residence at 24200 Norwood Drive, Plainfield, Illinois, 60585, without the approval of the Village President.

SECTION THIRTEEN: **GENERAL PROVISIONS:**

A. This Agreement sets forth the entire understanding of the parties and may only be amended, modified or terminated by a written instrument signed by the parties except as herein otherwise provided.

B. The EMPLOYEE acknowledges that the services to be rendered by him are unique and personal. Accordingly, the EMPLOYEE may not assign any of his rights or delegate any of his duties or obligations under this Agreement. This Agreement shall be

binding upon and inure to the benefit of any successor governmental legal entity or successor elected VILLAGE officials which may assume and perform the duties of the VILLAGE and/or the elected officials thereof.

C. The invalidity of any provision of this Agreement shall not impair the validity of any other provision. If any provision of this Agreement is determined by a court of competent jurisdiction to be unenforceable, that provision will be deemed severable and the Agreement may be enforced with that provision severed or as modified by the court.

D. This Agreement shall be interpreted and construed in accordance with the laws of the State of Illinois.

E. All notices hereunder shall be in writing and must be served either personally or by registered or certified mail to:

1. **VILLAGE** at:

   Village President
   Village of Willowbrook
   7760 Quincy Street
   Willowbrook, Illinois 60527

2. **EMPLOYEE** at:

   Mark Shelton
   24200 Norwood Drive
   Plainfield, Illinois 60585

3. To such other person or place which either party hereto by its prior written notice shall designate for notice to it from the other party hereto.

F. This Agreement is executed in multiple counterparts, each of which shall be deemed to be and shall constitute one and the same instrument.

IN WITNESS WHEREOF, the parties hereto have set their hands and seals this 12th day of April, 2010.

VILLAGE OF WILLOWBROOK,
an Illinois Municipal Corporation

By: _____
Village President

ATTEST:

_____
Village Clerk

_____
Mark Shelton

VILLAGE OF WILLOWBROOK

BOARD MEETING

AGENDA ITEM - HISTORY/COMMENTARY

ITEM TITLE: AN ORDINANCE AMENDING THE VILLAGE CODE OF THE VILLAGE OF WILLOWBROOK – TITLE 6, SECTION 6-8-3 – WATER SYSTEM; RATES

AGENDA NO. 16

AGENDA DATE: 4/12/10

STAFF REVIEW: **SIGNATURE:** Sue Stanish

LEGAL REVIEW: **SIGNATURE:** N/A

RECOMMENDED BY VILLAGE ADMIN.: **SIGNATURE:** Megan E. Dien

REVIEWED & APPROVED BY COMMITTEE: YES ☒ NO ☐ N/A ☐

ITEM HISTORY (PREVIOUS VILLAGE BOARD REVIEWS, ACTIONS RELATED TO THIS ITEM, OTHER PERTINENT HISTORY)

Prior to the April 12, 2010 Board meeting, the Municipal Services and Finance/Administration Committees will hold a joint meeting to recommend an increase to Village water rates. Attached is the ordinance necessary to increase water rates effective May 1, 2010. The new water rate amounts are blank pending final rate information from the DuPage Water Commission (DWC) and a recommendation from the Committees. A completed ordinance including rate information will be distributed prior to the Board meeting on April 12th.

As a reminder staff should receive final rate information from DWC on Friday April 9th. Based on the confirmed rate, the Committees will be reviewing two options for rate increases:

- **OPTION 1** - Pay as you go financing for the Village's water towers. In eight years there will be funds on hand to paint the towers (an annual transfer would be made from the water fund to the water capital fund to set aside these funds)

- **OPTION 1-A** – The Village will try and keep water rate increases at a minimum to cover the costs of increased purchased water costs from DWC. The Village will then issue bonds in eight years to fund painting of the water towers

ITEM COMMENTARY (BACKGROUND, DISCUSSION, KEY POINTS, RECOMMENDATIONS, ETC.)
The Municipal Services and Finance/Administration Committee's will make a water rate recommendation to the Village Board at the 4/12/10 meeting. An ordinance with the recommended water rates will be distributed to the Board prior to the start of the meeting.

ACTION PROPOSED: PASS THE ORDINANCE

ORDINANCE NO. 10-O-_____

AN ORDINANCE AMENDING THE VILLAGE CODE OF THE VILLAGE OF WILLOWBROOK - TITLE 6, SECTION 6-8-3 - WATER SYSTEM, RATES

BE IT ORDAINED by the President and Board of Trustees of the Village of Willowbrook, DuPage County, Illinois, that the Village Code of the Village of Willowbrook be amended as follows:

SECTION ONE: That Title 6, Section 6-8-3(A) of the Village Code of the Village of Willowbrook, entitled "Water Charges", is hereby amended by deleting all references to the term "$3.99" in their entirety and in lieu thereof, the following term shall be substituted:

"$"

SECTION TWO: That Title 6, Section 6-8-3(A) of the Village Code of the Village of Willowbrook entitled "Water Charges" is hereby amended by deleting all references to the term "$4.60" in their entirety and in lieu thereof, the following term shall be substituted:

"$"

SECTION THREE: That Title 6, Section 6-8-3(B)1 of the Village Code of the Village of Willowbrook entitled "Residential Usage - Exception" is hereby amended by deleting all reference to the term "thirty five dollars ninety one cents ($35.91)" in

its entirety and in lieu thereof, the following term shall be substituted:

..."($)"...

SECTION FOUR: That Title 6, Section 6-8-3(B)3 of the Village Code of the Village of Willowbrook entitled "Nonresidential Usage" is hereby deleted in its entirety and in lieu thereof, the following language shall be substituted:

"3. Nonresidential Usage: Minimum monthly charges shall be assessed in accordance with the following table:

Meter Size	Monthly Minimum
5/8 inch	$ per month
3/4 inch	per month
1 inch	per month
1 1/2 inch	per month
2 inch	per month
3 inch	per month
4 inch	per month
5 inch	per month
6 inch	per month"

SECTION FIVE: That Title 6, Section 6-8-3(B)4 of the Village Code of the Village of Willowbrook entitled "Hydrant Usage" is hereby amended by deleting all reference to the term "Fifty five dollars twenty cents ($55.20)" in its entirety and in lieu thereof, the following term shall be substituted:

..."($)"...

SECTION SIX: That all ordinances and resolutions or parts thereof, in conflict with the provisions of this Ordinance are, to the extent of such conflict, expressly repealed.

SECTION SEVEN: That this Ordinance shall be in full force and effect ten (10) days from and after its passage, approval and publication in pamphlet form as provided by law; provided, however, that the rates and charges established herein shall not become effective until May 1, 2010.

PASSED and APPROVED this_____day of _____, 2010.

APPROVED:

_____
Village President

ATTEST:

_____
Village Clerk

ROLL CALL VOTE: AYES: _____

NAYS: _____

ABSTENTIONS: _____

ABSENT: _____

VILLAGE OF WILLOWBROOK

BOARD MEETING

AGENDA ITEM - HISTORY/COMMENTARY

ITEM TITLE: RESOLUTION – A RESOLUTION AUTHORIZING THE PRESIDENT AND VILLAGE CLERK TO RENEW AN AGREEMENT FOR MANAGEMENT SERVICES

AGENDA NO. 17

AGENDA DATE: 4/12/2010

STAFF REVIEW: **SIGNATURE:**_____

LEGAL REVIEW: **SIGNATURE:** _____

RECOMMENDED BY VILLAGE ADMIN.: **SIGNATURE:** Megan E. Pierce

REVIEWED & APPROVED BY COMMITTEE: **YES** ☐ **NO** ☐ **N/A** ☒

ITEM HISTORY (PREVIOUS VILLAGE BOARD REVIEWS, ACTIONS RELATED TO THIS ITEM, OTHER PERTINENT HISTORY)

In October 2009, the Village President and Board approved a contract with Sikich LLP to provide management services—acting as the Interim Village Administrator on a part-time basis. Sikich's current agreement with the Village expires on April 19, 2010.

ITEM COMMENTARY (BACKGROUND, DISCUSSION, KEY POINTS, RECOMMENDATIONS, ETC.)

Larry Maholland and Megan Pierce, both consultants for Sikich LLP, have been acting in the capacity of Interim Village Administrator for the Village since October 2009. Their services are provided on an as-needed, hourly basis.

The attached agreement shows the hourly rates for both Administrator Services and travel. On average, services are provided between 14-16 hours weekly.

ACTION PROPOSED: Adopt the Resolution.

RESOLUTION NO. 10-R-____

A RESOLUTION AUTHORIZING THE PRESIDENT AND VILLAGE CLERK TO RENEW AN AGREEMENT FOR MANAGEMENT SERVICES

WHEREAS, the Village of Willowbrook desires employ Sikich, LLP to provide managerial services as the Village's Part-Time Village Administrator; and

WHEREAS, the President and Board of Trustees of the Village of Willowbrook have determined that it is in the best interests of the Village to renew the agreement with Sikich LLP defining the managerial services to be rendered and the compensation to be paid for the same, in accordance with the copy of the Agreement attached hereto as Exhibit "A" and, by this reference, incorporated herein.

NOW, THEREFORE, BE IT RESOLVED by the President and Board of Trustees of the Village of Willowbrook, DuPage County, Illinois, that the President and Village Clerk of said Village be and the same are hereby authorized to execute the Agreement attached hereto as Exhibit "A" defining the managerial services to be rendered by Sikich LLP as the Village's Part-Time Administrator.

ADOPTED and APPROVED this 12th day of April, 2010.

APPROVED:

_____
Village President

ATTEST:

_____
Village Clerk

ROLL CALL VOTE: AYES: _____

NAYS: _____

ABSTENTIONS: _____

ABSENT: _____