A G E N D A

REGULAR MEETING OF THE MAYOR AND BOARD OF TRUSTEES OF THE VILLAGE OF WILLOWBROOK TO BE HELD ON MONDAY, NOVEMBER 11, 2019, AT 6:30 P.M. AT THE WILLOWBROOK POLICE DEPARTMENT TRAINING ROOM, 7760 QUINCY STREET, WILLOWBROOK, IL, DUPAGE COUNTY, ILLINOIS

1. CALL TO ORDER

2. ROLL CALL

3. PLEDGE OF ALLEGIANCE

4. VISITORS' BUSINESS - Public Comment is Limited to Three Minutes Per Person

5. OMNIBUS VOTE AGENDA:

   a. Waive Reading of Minutes (APPROVE)

   b. Minutes - Regular Board Meeting - October 28, 2019 (APPROVE)

   c. Warrants - $375,673.39(APPROVE)

   d. Monthly Financial Report - October 2019 (APPROVE)

   e. RECEIVE PLAN COMMISSION RECOMMENDATION - Public Hearing Case 19-09: Consideration of a petition for text amendments to amend Sections 9-6B-1 (or 9-6B-2), 9-6C-1 (or 9-6C-2) and 9-6D-1 (or 9-6D-2) of Title 9 - Zoning Title of the Village of the Willowbrook Municipal Code to add "Video Gaming Cafe" as a new permitted or special use in the B-2, B-3 and B-4 Zoning Districts; to amend Section 9-2-2 of Title 9 - Zoning Title of the Village of the Willowbrook Municipal Code to add "Video Gaming Café" as a new definition and to amend the current definition of "Restaurant"; and to add new use categories in Sections 9-6A-1, 9-6A-2, 9-6B-1, 9-6B-2, 9-6C-1, 9-6C-2, 9-6D-1 and 9-6D-2 of Title 9 - Zoning Title of the Village of the Willowbrook Municipal Code (RECEIVE)

   f. REPORT - Annual Police Pension Board Report (RECEIVE)

NEW BUSINESS

6. RECEIVE - Concept Designs for the Village of Willowbrook Community Resource Center / Village Board Room at 825 Midway Drive by N. Batistich Architects (RECEIVE)

7. ORDINANCE - An Ordinance Amending Section 3-12-5 Entitled "Classifications," of Chapter 12 Entitled "Liquor," of Title 3 Entitled "Business" of the Village Code of Ordinances of the Village of Willowbrook, DuPage County, Illinois (PASS)

8. RESOLUTION - A Resolution Approving and Authorizing the Mayor and Village Clerk to Execute an Agreement with N.J. Ryan Tree & Landscaping, LLC to Provide Snow Removal and Salting Services for the 2019/2020 Winter Season in the Village of Willowbrook (ADOPT)

9. RESOLUTION - A Resolution Approving and Authorizing the Purchase of Two (2)2019 Ford F-350 XL 4X2 Pick-Up Trucks, Excluding Service Bodies, From Willowbrook Ford/Kia, Inc. at a Total Cost Not-To-Exceed $60,874.00 Plus Extended Warranties in the Amount of $3,625.00 Per Vehicle (ADOPT)

PRIOR BUSINESS

10. TRUSTEE REPORTS

11. ATTORNEY'S REPORT

12. CLERK'S REPORT

13. ADMINISTRATOR'S REPORT

14. MAYOR'S REPORT

15. CLOSED SESSION

16. ADJOURNMENT

MINUTES OF THE REGULAR MEETING OF THE MAYOR AND BOARD OF TRUSTEES OF THE VILLAGE OF WILLOWBROOK HELD ON MONDAY, OCTOBER 28, 2019 AT THE WILLOWBROOK POLICE DEPARTMENT, 7760 QUINCY STREET, VILLAGE OF WILLOWBROOK, DUPAGE COUNTY, ILLINOIS. **5b**

1. CALL TO ORDER

The meeting was called to order at the hour of 6:30 p.m. by Mayor Frank Trilla.

2. ROLL CALL

Those present at roll call were Mayor Trilla, Village Clerk Leroy Hansen, Trustees Sue Berglund, Umberto Davi, Terrence Kelly, Michael Mistele, Gayle Neal and Paul Oggerino.

ABSENT: None.

Also present were Village Attorney Thomas Bastian, Village Administrator Brian Pabst, Director of Finance Carrie Dittman, Chief Robert Schaller, Assistant Village Administrator Michael Mertens, Superintendent of Public Works Joe Coons and Deputy Clerk Christine Mardegan.

A QUORUM WAS DECLARED

3. PLEDGE OF ALLEGIANCE

Mayor Trilla asked guest, Elizabeth and her father to lead everyone in saying the Pledge of Allegiance.

4. VISITORS' BUSINESS

None presented.

5. OMNIBUS VOTE AGENDA

a. Waive Reading of Minutes (APPROVE)
b. Minutes - Regular Board Meeting - October 14, 2019 (APPROVE)
c. Warrants - $146,773.43 (APPROVE)
d. Motion - A Motion for Board Authorization for Staff to Process Current Delinquent Water Bills in Accordance with Past Practices (PASS)
e. Motion - A Motion to Approve Expenditure for the Annual Power DMS Host Subscription Fee for Fiscal Year 2019/20 (PASS)
f. Motion - A Motion to Approve Expenditure for the Annual Continuation Fee for Commission on Accreditation for Law Enforcement Agencies, Inc. (CALEA) for Fiscal Year 2019/20 (PASS)

Mayor Trilla asked the Board if there were any items to be removed from the Omnibus Vote Agenda.

MOTION: Made by Trustee Mistele and seconded by Trustee Oggerino to approve the Omnibus Vote Agenda as presented.

ROLL CALL VOTE: AYES: Trustees Berglund, Davi, Kelly, Mistele, Neal and Oggerino. NAYS: None. ABSENT: None.

MOTION DECLARED CARRIED

NEW BUSINESS

6. MOTION - A Motion to Approve the Fiscal Year 2018-19 Comprehensive Annual Financial Report (CAFR) and Management Letter (PASS)

Director Dittman advised that in the Board packet are excerpts of the Annual Audit that was prepared. Highlights included:

- The Village received again this year an unqualified "clean" opinion on its financial statements. This is the highest level of opinion that the Village can receive. The CAFR will again be submitted to the Government Finance Officers' Association for consideration of a Certificate of Achievement for Excellence in Financial Reporting. If successful, this will be the 31st year in row for receiving this award.
- General Fund Revenue exceeded budget by $1.77 million. Director Dittman advised that the main contributing factors were sales taxes at about $580,000 over budget, revenue from building permits were $469,000 or 182 % over budget and red-light fines were $372,000 or 66% over budget.
- General Fund Expenditures were over budget by $503,000. The major contributing factor was the unbudgeted crisis management expense within the Administration Dept., which totaled about $562,000.
- The net increase in the General Fund's fund balance was $207,219; the Village had budgeted to draw down $1,076,812. The Village's ending General Fund balance for April 30, 2019 is $5,255,725, of which $5,026,889 is unrestricted and which represents approximately 212 days of operating expenditures, which exceeds the Village's targeted amount of 120 days.

Director Dittman introduced Scott Termine from BKD, LLP., auditors for the Village of Willowbrook. Mr. Termine reviewed highlights of the Comprehensive Annual Financial Report.

MOTION: Made by Trustee Davi and seconded by Trustee Berglund to approve the Fiscal Year 2018/19 Comprehensive Annual Financial Report and Audit Management Letter as presented.

7. RESOLUTION - A Resolution of the Village of Willowbrook Estimating the Property Taxes to be Levied for the 2019 Property Tax Levy (ADOPT)

Director Dittman stated one component of the Parks and Recreation Department budget is how the Special Recreation Tax Levy funds certain expenses. The Village Board determined that funding the following items through the Special Recreation Tax is preferable to funding them form General sources:

- Willowbrook's Membership in the Gateway Special Recreation Association
- Expenses in assisting recreation participants requiring ADA accommodations
- Improvements to our parks and playgrounds in providing better accessibility

Currently, the tax impact for a homeowner with a home market value of $300,000 is approximately $16.36.

Per 35 ILCS 200/18-60, the Village is required, not less than 20 days prior to the adoption of its aggregate levy, to determine the amounts of money estimated to be necessary to be raised by taxation for that year upon the taxable property in its district. The 2019 proposed tax levy is $72,750. At this amount, the tax impact for a home owner with a home market value of $300,000 would be approximately $15.26. This is a 2.24% decrease from the prior year's levy, or $1,670, and includes amounts planned for ADA Accessibility at the Village parks and the Community Resource Center. All tax collected is restricted to be used on special recreations activities.

Trustee Neal asked, "Will some of the money be used for the ADA resource center?" "Could any of the funds be used to make the police department front door ADA complaint?" Director Dittman said yes.

MOTION: Made by Trustee Kelly and seconded by Trustee Neal to adopt Resolution No. 19-R-57 as presented.

PREVIOUS ROLL CALL VOTE: AYES: Trustees Berglund, Davi, Kelly, Mistele, Neal and Oggerino. NAYS: None. ABSENT: None.

MOTION DECLARED CARRIED

8. ORDINANCE - An Ordinance Amending Section 3-1A-1 Entitled "Fees Enumerated" of Chapter 1A Entitled "License Fees" of Title 3 Entitled "Business Regulations" of the Village Code of Ordinances of the Village of Willowbrook, DuPage County, Illinois (PASS)

Administrator Pabst related that business licensing fees have not increased for over a decade. Staff presented the information above at the Finance and Administration Committee meeting on October 14, 2019, and the Committee was not in favor of the fee increase. The item is now being presented to the full Board for discussion. An ordinance was drafted using a 20% across-the-board fee increase, however, that amount could be modified. If the ordinance is adopted, the business and vending machine license fees would be updated in the accounting system in the following week so that invoices could be sent to the businesses in early November, as the current licenses expire December 31, 2019. Changes to the video gaming license fee will be considered separately.

Trustee Mistele discussed that the Village is operating on about a $9.6 million year and this licensing fee increase would not have much of an effect on our revenue stream. He does not think it is a good idea if we raise the fees, especially for our small business. We ran two business out of town and now have two empty buildings. We want business to stay by not increasing these fees.

Trustee Kelly and Trustee Davi wanted clarification as to what two business we ran out of town? Trustee Mistele responded that we ran Sterigenics out town and we will have two empty buildings.
Mayor Trilla responded that there are several businesses interested in the Sterigenics property. Trustee Davi said, "that's good that we ran them out of town. Right?" Several Trustees and Attorney Bastian stated we did not run them out of town. Trustee Davi questioned Trustee Mistele, what is the other business? Trustee Mistele restated that he meant two buildings not businesses. Trustee Davi thanked him for his clarification.

Trustee Berglund felt that the Board should wait until next year to increase the fees. Trustee Kelly asked, "Why aren't the video gaming and liquor licenses included?" Assistant Administrator Mertens responded that the Plan Commission is having a meeting on November 6th with a text amendment to consider video gaming cafes. If that is passed, the Board will consider changing the ordinance associated with liquor licensing and video gaming, along with the text amendment ordinance, at the November 25, 2019 Village Board meeting.

Trustee Neal stated that the Trustees need to choose their words carefully when discussing businesses that have left Willowbrook. No offense to Trustee Berglund or Mistele.

Mayor Trilla stated that he is a small business owner and paying for a business license is one of the smallest bills a business owner will incur. The fees are a minimal expense to the businesses of Willowbrook. He encouraged the Board to consider this ordinance.

Attorney Bastian noted that there are a few typos in the fees noted in the ordinance and asked Director Dittman to list what those are. Director Dittman stated:
#2(i) Recreational Amusements should be $240.00 per year; #14 (b.1) Hardware and Paint stores should be $96.00 per year; #16 (a.2) Seating Capacity 51 to 100 should be $330.00; and #16 (a.4) All Drive-in or Fast Food Restaurants should be $270.00 per year plus $2.00 for each seat.
Mayor Trilla suggested that the staff look into the best way to monitor Food Trucks in the area. There was a discussion on different ways to manage the food trucks.
Attorney Bastian stated that is something that can be considered and the code may be amended later.
Trustee Mistele suggested that the video gaming license be amended.
Attorney Bastian stated it will be amended on November 25, 2019.

MOTION: Made by Trustee Oggerino and seconded by Trustee Neal to adopt Ordinance No. 19-O-27 as amended.

PREVIOUS ROLL CALL VOTE: AYES: Trustees Berglund, Davi, Kelly, Mistele, Neal and Oggerino. NAYS: None. ABSENT: None.

MOTION DECLARED CARRIED

9. TRUSTEE REPORTS

Trustee Neal had no report.

Trustee Kelly had no report.

Trustee Mistele had no report.

Trustee Berglund had no report.

Trustee Davi had no report.

Trustee Oggerino sends his condolence to Sargant Gaddis' family and the service is on November 2, 2019.

10. ATTORNEY'S REPORT

Attorney Bastian had no report.

11. CLERK'S REPORT

Clerk Hansen had no report.

12. ADMINISTRATOR'S REPORT

Administrator Pabst had no report.

13. MAYOR'S REPORT

Mayor Trilla had no report.

14. CLOSED SESSION

Mayor Trilla stated that there was no need for Closed Session during tonight's meeting.

15. ADJOURNMENT

MOTION: Made by Trustee Mistele and seconded by Trustee Berglund, to adjourn the Regular Meeting at the hour of 7:06 p.m.

ROLL CALL VOTE: AYES: Trustees Berglund, Davi, Kelly, Mistele, Neal and Oggerino. NAYS: None. ABSENT: None.

MOTION DECLARED CARRIED

PRESENTED, READ and APPROVED.

_____, 2019.

_____
Frank A. Trilla, Mayor

Minutes transcribed by Deputy Clerk Christine Mardegan.

WARRANTS

November 11, 2019

GENERAL CORPORATE FUND	----------	$228,393.39
WATER FUND	----------	$147,072.64
MOTOR FUEL TAX FUND	----------	87.36
POLICE PENSION FUND	----------	$120.00
TOTAL WARRANTS	----------	$375,673.39

Carrie Dittman, Director of Finance C.D.

APPROVED:
Frank A. Trilla, Mayor

CHECK DISBURSEMENT REPORT FOR VILLAGE OF WILLOWBROOK
CHECK DATE FROM 10/30/2019 - 11/12/2019

Check Date	Bank	Check #	Payee	Description	Account	Dept	Amount
Fund: 01 GENERAL FUND							
10/30/2019	APCH	94911	ILLINOIS STATE TREASURER	ESCHEATS/UNCLAIMED PROP PAYABLE	210-102	00	519.00
10/30/2019	APCH	94912	GOVT FINANCE OFCRS ASSN	FEES/DUES/SUB - CAFR REVIEW	610-307	25	460.00
11/12/2019	APCH	150(E)*#	INTERGOVERMENTAL PERSONNEL	EMP DED PAY- INSURANCE	210-204	00	16,495.89
				LIFE INSURANCE - ELECTED OFFICIALS	410-141	05	63.84
				LIFE INSURANCE - COMMISSIONERS	435-148	07	18.48
				HEALTH/DENTAL/LIFE INSURANCE	455-141	10	84.15
				HEALTH/DENTAL/LIFE INSURANCE	455-141	10	3,633.00
				HEALTH/DENTAL/LIFE INSURANCE	510-141	15	588.89
				LIFE INSURANCE - PLAN COMMISSION	510-340	15	70.56
				LIFE INSURANCE - COMMISSIONERS	550-148	20	72.24
				HEALTH/DENTAL/LIFE INSURANCE	610-141	25	1,106.09
				HEALTH/DENTAL/LIFE INSURANCE	630-141	30	24,703.46
				HEALTH/DENTAL/LIFE INSURANCE	710-141	35	4,195.04
				HEALTH/DENTAL/LIFE INSURANCE	810-141	40	1,792.43
				CHECK APCHK 150(E) TOTAL FOR FUND 01:			52,824.07
11/12/2019	APCH	151(E)*#	WEX BANK	FUEL/MILEAGE/WASH	455-303	10	36.00
				FUEL/MILEAGE/WASH	630-303	30	3,805.86
				FUEL/MILEAGE/WASH	710-303	35	612.05
				FUEL/MILEAGE/WASH	810-303	40	51.13
				CHECK APCHK 151(E) TOTAL FOR FUND 01:			4,505.04
11/12/2019	APCH	94913	ARAMARK UNIFORMS SERVICES	UNIFORMS - CJ	710-345	35	64.18
11/12/2019	APCH	94914	BLACK GOLD SEPTIC	MAINTENANCE - PW BUILDING	725-418	35	350.00
11/12/2019	APCH	94915	CAROLINE DITTMAN	FUEL/MILEAGE/WASH	610-303	25	23.14
11/12/2019	APCH	94917	CINTAS CORPORATION NO 2	MAINTENANCE - PW BUILDING	725-418	35	74.66
				MAINTENANCE - PW BUILDING	725-418	35	74.66
				CHECK APCHK 94917 TOTAL FOR FUND 01:			149.32
11/12/2019	APCH	94918	CITY WIDE OF ILLINOIS	MAINTENANCE - BUILDING	466-228	10	2,847.87
				MAINTENANCE - BUILDING	466-228	10	365.98
				CHECK APCHK 94918 TOTAL FOR FUND 01:			3,213.85
11/12/2019	APCH	94919#	COMCAST CABLE	INTERNET/WEBSITE HOSTING	460-225	10	225.54
				INTERNET/WEBSITE HOSTING	715-225	35	106.85
				CHECK APCHK 94919 TOTAL FOR FUND 01:			332.39

Check Date	Bank	Check #	Payee	Description	Account	Dept	Amount
Fund: 01 GENERAL FUND							
11/12/2019	APCH	94920*#	COMED	ENERGY - STREET LIGHTS	745-207	35	763.89
11/12/2019	APCH	94921#	DUPAGE MAYORS AND MGRS. CONF.	SCHOOLS/CONFERENCES/TRAVEL	410-304	05	40.00
				SCHOOLS/CONFERENCES/TRAVEL	455-304	10	40.00
				CHECK APCHK 94921 TOTAL FOR FUND 01:			80.00
11/12/2019	APCH	94922	EVT TECH	NEW VEHICLES - 55	680-625	30	14,215.46
				NEW VEHICLES - 59	680-625	30	14,155.51
				CHECK APCHK 94922 TOTAL FOR FUND 01:			28,370.97
11/12/2019	APCH	94923	FEDERAL EXPRESS CORP.	POSTAGE & METER RENT	455-311	10	30.46
11/12/2019	APCH	94924	FENSKE JOHN	CHILDRENS SPECIAL EVENTS - OTHER	585-150	20	137.89
11/12/2019	APCH	94925*#	FIRST NATIONAL BANK OMAHA	OTHER RECEIPTS	310-913	00	(50.00)
				PRINTING & PUBLISHING	455-302	10	48.01
				COMMISSARY PROVISION	455-355	10	50.89
				EDP EQUIPMENT/SOFTWARE	460-212	10	17.42
				EDP EQUIPMENT/SOFTWARE	815-212	40	17.42
				CHECK APCHK 94925 TOTAL FOR FUND 01:			83.74
11/12/2019	APCH	94926	GHD SERVICES INC.	CRISIS MANAGEMENT	475-367	10	7,214.45
11/12/2019	APCH	94928*#	H AND R CONSTRUCTION INC.	STORM WATER IMPROVEMENTS MAINTENANCE	750-381	35	3,630.00
				STORM WATER IMPROVEMENTS MAINTENANCE	750-381	35	2,500.00
				STORM WATER IMPROVEMENTS MAINTENANCE	750-381	35	3,200.00
				STORM WATER IMPROVEMENTS MAINTENANCE	750-381	35	3,600.00
				CHECK APCHK 94928 TOTAL FOR FUND 01:			12,930.00
11/12/2019	APCH	94930#	HANSON LANDSCAPE DESIGN	CONTRACTED MAINTENANCE	570-281	20	4,784.91
				CONTRACTED MAINTENANCE	570-281	20	4,784.91
				ROUTE 83 BEAUTIFICATION	755-281	35	4,243.22
				ROUTE 83 BEAUTIFICATION	755-281	35	4,243.22
				CHECK APCHK 94930 TOTAL FOR FUND 01:			18,056.26
11/12/2019	APCH	94931	HINSDALE NURSERIES, INC.	STREET & ROW MAINTENANCE	750-328	35	2,930.00
				STREET & ROW MAINTENANCE	750-328	35	247.00
				CHECK APCHK 94931 TOTAL FOR FUND 01:			3,177.00

Check Date	Bank	Check #	Payee	Description	Account	Dept	Amount
Fund: 01 GENERAL FUND							
11/12/2019	APCH	94932	HUNTER ASPHALT PAVING INC	STREET & ROW MAINTENANCE OTHER	755-328	35	4,523.00
11/12/2019	APCH	94933	IL PUBLIC WORKS MUTUAL AID NETWO	FEES/DUES/SUBSCRIPTIONS	710-307	35	75.00
11/12/2019	APCH	94934	ILL. ASSN. CHIEFS OF POLICE	FEES/DUES/SUBSCRIPTIONS	630-307	30	95.00
11/12/2019	APCH	94935	ILL. FIRE & POLICE COMM. ASSN.	FEES/DUES/SUBSCRIPTIONS	435-307	07	375.00
11/12/2019	APCH	94936	ILL. MUNICIPAL LEAGUE	FEES/DUES/SUBSCRIPTIONS	410-307	05	925.00
11/12/2019	APCH	94937	IMPACT NETWORKING LLC	OFFICE SUPPLIES	455-301	10	303.84
11/12/2019	APCH	94938	INDUSTRIAL ELECTRICAL SUPPLY	MAINTENANCE - BUILDING	466-228	10	26.00
				MAINTENANCE - BUILDING	466-228	10	147.00
				MAINTENANCE - BUILDING	466-228	10	136.00
				CHECK APCHK 94938 TOTAL FOR FUND 01:			309.00
11/12/2019	APCH	94939	INTOXIMETERS	JAIL SUPPLIES	650-343	30	205.25
11/12/2019	APCH	94940	J.Kenny Carlin	BTCO18-003 - PB18-150	210-109	00	21,750.00
11/12/2019	APCH	94941	KEVRON PRINTING & DESIGN INC	PRINTING & PUBLISHING	455-302	10	254.00
11/12/2019	APCH	94943	LORI RINELLA	FUEL/MILEAGE/WASH	630-303	30	24.01
				FUEL/MILEAGE/WASH	630-303	30	47.79
				CHECK APCHK 94943 TOTAL FOR FUND 01:			71.80
11/12/2019	APCH	94945	METROPOLITAN MAYORS CAUCUS	FEES/DUES/SUBSCRIPTIONS	410-307	05	384.30
11/12/2019	APCH	94946	MID AMERICAN WATER	STORM WATER IMPROVEMENTS MAINTENANCE	750-381	35	500.00
				STORM WATER IMPROVEMENTS MAINTENANCE	750-381	35	500.00
				STORM WATER IMPROVEMENTS MAINTENANCE	750-381	35	155.00
				CHECK APCHK 94946 TOTAL FOR FUND 01:			1,155.00
11/12/2019	APCH	94947	MIDWEST GANG INVESTIGATORS	FEES/DUES/SUBSCRIPTIONS	630-307	30	330.00
11/12/2019	APCH	94948	NCPERS GROUP LIFE INSURANCE	EMP DED - SUPPLEMENTAL LIFE INSURANCE	210-213	00	80.00
11/12/2019	APCH	94949	NICHOLAS VOLEK	UNIFORMS	630-345	30	153.46
11/12/2019	APCH	94950#	NICOR GAS	NICOR GAS (835 MIDWAY)	466-236	10	81.73
				NICOR GAS (825 MIDWAY)	570-235	20	37.55
				NICOR GAS (7760 QUINCY)	630-235	30	182.09
				NICOR GAS	725-415	35	71.33
				CHECK APCHK 94950 TOTAL FOR FUND 01:			372.70

Check Date	Bank	Check #	Payee	Description	Account	Dept	Amount
Fund: 01 GENERAL FUND							
11/12/2019	APCH	94951	NJ RYAN TREE & LANDSCAPE LLC	TREE MAINTENANCE	750-338	35	7,275.00
				TREE MAINTENANCE	750-338	35	6,300.00
				TREE MAINTENANCE	750-338	35	5,400.00
				TREE MAINTENANCE	750-338	35	7,425.00
				TREE MAINTENANCE	750-338	35	7,875.00
				TREE MAINTENANCE	750-338	35	8,550.00
				TREE MAINTENANCE	750-338	35	7,087.50
				STORM WATER IMPROVEMENTS MAINTENANCE	750-381	35	3,375.00
				CHECK APCHK 94951 TOTAL FOR FUND 01:			53,287.50
11/12/2019	APCH	94954	ORKIN EXTERMINATING	MAINTENANCE - BUILDING	466-228	10	193.26
11/12/2019	APCH	94955	PURE PRAIRIE ORGANICS	LANDSCAPE MAINTENANCE SERVICES	565-342	20	3,814.00
11/12/2019	APCH	94956	RAY O'HERRON CO., INC.	UNIFORMS	630-345	30	224.97
				UNIFORMS	630-345	30	47.99
				UNIFORMS	630-345	30	174.99
				UNIFORMS	630-345	30	37.19
				CHECK APCHK 94956 TOTAL FOR FUND 01:			485.14
11/12/2019	APCH	94957	STAPLES	OFFICE SUPPLIES	455-301	10	45.10
				COMMISSARY PROVISION	455-355	10	30.74
				CHECK APCHK 94957 TOTAL FOR FUND 01:			75.84
11/12/2019	APCH	94958	STRATEGIA CONSULTING, LLC	CRISIS MANAGEMENT	475-367	10	1,250.00
11/12/2019	APCH	94959	TEMPERATURE ENGINEERNG INC	MAINTENANCE - BUILDING	466-228	10	2,776.89
11/12/2019	APCH	94961	THOMPSON ELEV. INSPECT. SERVICE	ELEVATOR INSPECTION	830-117	40	129.00
11/12/2019	APCH	94963#	WAREHOUSE DIRECT	OFFICE SUPPLIES	455-301	10	11.17
				OFFICE SUPPLIES	455-301	10	3.53
				COMMISSARY PROVISION	455-355	10	66.81
				COMMISSARY PROVISION	455-355	10	46.41
				OPERATING EQUIPMENT	630-401	30	48.48
				OPERATING EQUIPMENT	630-401	30	46.05
				OPERATING EQUIPMENT	630-401	30	413.97
				CHECK APCHK 94963 TOTAL FOR FUND 01:			636.42
11/12/2019	APCH	94964	WESTERN FIRST AID & SAFETY	OPERATING EQUIPMENT	630-401	30	69.45
11/12/2019	APCH	94965	WILD GOOSE CHASE INC	LANDSCAPE MAINTENANCE SERVICES	565-342	20	960.00

Check Date	Bank	Check #	Payee	Description	Account	Dept	Amount
Fund: 01 GENERAL FUND							
11/12/2019	APCH	94966	WILL COUNTY CLERK	FEES/DUES/SUBSCRIPTIONS	630-307	30	10.00
11/12/2019	APCH	94967	WILLOWBROOK FORD INC.	MAINTENANCE - VEHICLES	735-409	35	57.89
				Total for fund 01 GENERAL FUND			228,393.39

Check Date	Bank	Check #	Payee	Description	Account	Dept	Amount
Fund: 02 WATER FUND							
11/12/2019	APCH	149(E)	DUPAGE WATER COMMISSION	PURCHASE OF WATER	420-575	50	127,425.83
11/12/2019	APCH	150(E)*#	INTERGOVERMENTAL PERSONNEL	HEALTH/DENTAL/LIFE INSURANCE	401-141	50	4,267.95
11/12/2019	APCH	151(E)*#	WEX BANK	FUEL/MILEAGE/WASH	401-303	50	612.05
11/12/2019	APCH	94916	CHICAGOLAND PAVING	WATER DEPOSIT REFUND	280-131	00	108.50
11/12/2019	APCH	94920*#	COMED	ENERGY - ELECTRIC PUMP	420-206	50	417.80
11/12/2019	APCH	94927	GRAINGER	MATERIALS & SUPPLIES- STANDPIPE/PUMPH	425-475	50	580.41
11/12/2019	APCH	94928*#	H AND R CONSTRUCTION INC.	WATER DISTRIBUTION REPAIRS/MAINTENANC	430-277	50	3,600.00
				WATER DISTRIBUTION REPAIRS/MAINTENANC	430-277	50	8,850.00
				CHECK APCHK 94928 TOTAL FOR FUND 02:			12,450.00
11/12/2019	APCH	94929	HACH CHEMICAL COMPANY	CHEMICALS	420-361	50	447.30
11/12/2019	APCH	94942*#	LA FASTENERS INC	MATERIAL & SUPPLIES - DISTRIBUTION	430-476	50	38.57
11/12/2019	APCH	94944	METROPOLITAN INDUSTRIES INC	EDP LICENSES	417-263	50	138.00
11/12/2019	APCH	94952	NOVOTNY ENGINEERING	MATERIALS & SUPPLIES- STANDPIPE/PUMPH	425-475	50	308.00
11/12/2019	APCH	94953	OFFICIAL PAYMENTS CORP	FEES DUES SUBSCRIPTIONS	401-307	50	19.50
11/12/2019	APCH	94960	THE KNOLLS	WATER DEPOSIT REFUND	280-131	00	183.67
11/12/2019	APCH	94962	VERIZON WIRELESS	PHONE - TELEPHONES	401-201	50	75.06
				Total for fund 02 WATER FUND			147,072.64

Check Date	Bank	Check #	Payee	Description	Account	Dept	Amount
Fund: 04 MOTOR FUEL TAX FUND							
11/12/2019	APCH	94942*#	LA FASTENERS INC	STREET MAINTENANCE CONTRACT	430-684	56	87.36
				Total for fund 04 MOTOR FUEL TAX FUND			87.36

Check Date	Bank	Check #	Payee	Description	Account	Dept	Amount
Fund: 07 POLICE PENSION FUND							
11/12/2019	APCH	94925*#	FIRST NATIONAL BANK OMAHA	SCHOOLS CONFERENCE TRAVEL-DITTMAN	401-304	62	120.00
				Total for fund 07 POLICE PENSION FUND			120.00
			TOTAL - ALL FUNDS				375,673.39

'*'-INDICATES CHECK DISTRIBUTED TO MORE THAN ONE FUND
'#'-INDICATES CHECK DISTRIBUTED TO MORE THAN ONE DEPARTMENT

Payroll Liability Check Register
For Check Dates 10/01/2019 to 10/31/2019

Check Number	Vendor Name	Check Date	Check Amount
53570	COMMUNITY BANK OF WILLOWBROOK	10/11/2019	539.58
53571	I C M A RETIREMENT TRUST - 457	10/11/2019	725.00
53572	ILLINOIS STATE DISBURSEMENT UNIT	10/11/2019	1,190.00
53573	NATIONWIDE RETIREMENT SOLUTIONS	10/11/2019	8,109.14
53574	VILLAGE OF WILLOWBROOK	10/11/2019	45,589.58
53580	AFLAC	10/25/2019	2,042.82
53581	COMMUNITY BANK OF WILLOWBROOK	10/25/2019	539.58
53582	I C M A RETIREMENT TRUST - 457	10/25/2019	725.00
53583	ILLINOIS STATE DISBURSEMENT UNIT	10/25/2019	2,303.87
53584	ILLINOIS FRATERNAL	10/25/2019	960.00
53585	NATIONWIDE RETIREMENT SOLUTIONS	10/25/2019	8,114.00
53586	VILLAGE OF WILLOWBROOK	10/25/2019	45,473.27
EFT258	EFTPS	10/11/2019	31,936.20
EFT259	ILLINOIS DEPT. OF REVENUE	10/11/2019	6,933.90
EFT260	EFTPS	10/25/2019	41,011.80
EFT261	I.M.R.F. PENSION FUND	10/25/2019	20,923.92
EFT262	ILLINOIS DEPT. OF REVENUE	10/25/2019	5,351.02
Total Checks: 17		Total Paid:	$222,468.68

MONTHLY FINANCIAL REPORT

OCTOBER 2019

RESPECTFULLY SUBMITTED BY:

Frank A. Trilla, Mayor

Carrie Dittman, Director of Finance

VILLAGE OF WILLOWBROOK
FINANCIAL REPORT
MUNICIPAL SALES AND USE TAXES

MONTH DIST	SALE MADE	15-16	16-17	17-18	18-19	19-20	% increase from prior year
MAY	FEB	$ 253,282	$ 267,882	$ 264,472	$ 276,118	$ 320,221	15.97%
JUNE	MAR	301,469	312,681	304,436	334,282	360,870	7.95%
JULY	APR	267,013	269,580	304,925	309,957	343,577	10.85%
AUG	MAY	328,251	331,887	345,478	376,154	397,471	5.67%
SEPT	JUNE	349,847	398,196	354,582	364,229	408,372	12.12%
OCT	JULY	306,409	316,266	313,701	320,062	380,773	18.97%
NOV	AUG	337,896	315,293	361,826	339,020		
DEC	SEPT	360,843	325,374	334,582	342,467		
JAN	OCT	318,340	289,208	312,400	329,103		
FEB	NOV	304,839	304,898	319,012	362,572		
MARCH	DEC	393,072	371,080	416,900	428,214		
APRIL	JAN	266,970	263,392	285,192	296,927		
TOTAL		$ 3,788,231	$ 3,765,737	$ 3,917,506	$ 4,079,105	$ 2,211,284	
MTH AVG		$ 315,686	$ 313,811	$ 326,459	$ 339,925	$ 368,547	
BUDGET		*$ 3,600,000*	*$ 3,600,000*	*$ 3,600,000*	*$ 3,600,000*	*$ 4,000,000*	

YEAR TO DATE LAST YEAR :	$ 1,980,802
YEAR TO DATE THIS YEAR :	$ 2,211,284
DIFFERENCE :	$ 230,482
PERCENTAGE CHANGE :	11.64%

CURRENT FISCAL YEAR :

BUDGETED REVENUE:	$ 4,000,000
PERCENTAGE OF YEAR COMPLETED :	50.00%
PERCENTAGE OF REVENUE TO DATE :	55.28%
PROJECTION OF ANNUAL REVENUE :	$ 4,553,741
EST. DOLLAR DIFF ACTUAL TO BUDGET	$ 553,741
EST. PERCENT DIFF ACTUAL TO BUDGET	13.8%

VILLAGE OF WILLOWBROOK
MONTHLY CASH AND INVESTMENT BALANCE BY FUND
FOR THE MONTH ENDED 10/31/2019

ACCOUNT	BALANCE
Fund 01 GENERAL FUND	
CHECKING - 0283	0.00
COMMUNITY BANK OF WB - 0275	404,252.09
IL FUNDS - 5435	3,411,896.85
COMMUNITY BANK OF WB MM - 1771	305,484.07
COMMUNITY BANK RD LGHT - 0243	16,686.07
COMMUNITY BANK OF WB FSA - 3804	11,349.19
U.S. BANK RED LIGHT - 4216	15,100.00
COMMUNITY BANK DRUG ACCT - 4171	82,078.77
PETTY CASH REVLVING	950.00
IMET - GENERAL	29.15
Total For Fund 01:	4,247,826.19
Fund 02 WATER FUND	
IL FUNDS WATER - 5914	1,053,104.08
COMMUNITY BANK OF WB WTR - 4163	545,230.62
COMMUNITY BANK OF WB - 0275	0.00
Total For Fund 02:	1,598,334.70
Fund 03 HOTEL/MOTEL TAX FUND	
IL FUNDS HOTEL/MOTEL - 5948	619,346.90
COMMUNITY BANK OF WB - 0275	11,074.95
Total For Fund 03:	630,421.85
Fund 04 MOTOR FUEL TAX FUND	
IL FUNDS MFT - 5443	448,014.84
Total For Fund 04:	448,014.84
Fund 06 SSA ONE BOND & INTEREST FUND	
IL FUNDS SSA BOND - 4621	101,355.60
COMMUNITY BANK OF WB - 0275	162,847.85
Total For Fund 06:	264,203.45
Fund 07 POLICE PENSION FUND	
COMMUNITY BANK OF WB PP - 4155	2,574.88
COMMUNITY BANK OF WB - 0275	0.00
SCHWAB - PP MONEY MARKET	86,141.60
US TREASURIES	457,550.88
US AGENCIES	5,694,392.35
MUNICIPAL BONDS	990,718.82
CORPORATE BONDS	1,800,182.95
MUTUAL FUNDS	13,207,496.46
MARKET VALUE CONTRA	1,204,102.96
Total For Fund 07:	23,443,160.90
Fund 09 WATER CAPITAL IMPROVEMENTS FUND	
IL FUNDS WTR CAP - 1206	440,881.31
Total For Fund 09:	440,881.31
Fund 10 CAPITAL PROJECT FUND	
IL FUNDS CAP PROJECTS - 3133	674.60
Total For Fund 10:	674.60
Fund 11 DEBT SERVICE FUND	
IL FUNDS BOND PROCEEDS DS - 2756	11.25
Total For Fund 11:	11.25
Fund 14 LAND ACQUISITION, FACILITY, EXPANSION &	
IL FUNDS BOND PROCEEDS LAFER - 2772	0.02
IL FUNDS - 5435	22,019.00
Total For Fund 14:	22,019.02
Fund 15 RT 83/PLAINFIELD RD BUSINESS DISTRCT TAX	
IL FUNDS BUSINESS DISTRICT - 5435	1,270,756.41
Total For Fund 15:	1,270,756.41
TOTAL CASH & INVESTMENTS:	**32,366,304.52**

ACCOUNT BALANCE REPORT FOR WILLOWBROOK
PERIOD ENDING 10/31/2019
CASH & INVESTMENTS BY FUND AND ACCOUNT TYPE

GL NUMBER	DESCRIPTION	END BALANCE 10/31/2019
Fund 01 - GENERAL FUND		
MONEY MARKET		
01-00-110-322	IL FUNDS - 5435	3,411,896.85
01-00-110-323	COMMUNITY BANK OF WB MM - 1771	305,484.07
01-00-110-325	COMMUNITY BANK RD LGHT - 0243	16,686.07
01-00-110-380	COMMUNITY BANK DRUG ACCT - 4171	82,078.77
01-00-120-155	IMET - GENERAL	29.15
	Net MONEY MARKET	3,816,174.91
PETTY CASH		
01-00-110-911	PETTY CASH REVLVING	950.00
	Net PETTY CASH	950.00
SAVINGS		
01-00-110-257	COMMUNITY BANK OF WB - 0275	404,252.09
01-00-110-332	COMMUNITY BANK OF WB FSA - 3804	11,349.19
01-00-110-335	U.S. BANK RED LIGHT - 4216	15,100.00
	Net SAVINGS	430,701.28
Fund 02 - WATER FUND		
MONEY MARKET		
02-00-110-113	IL FUNDS WATER - 5914	1,053,104.08
02-00-110-209	COMMUNITY BANK OF WB WTR - 4163	545,230.62
	Net MONEY MARKET	1,598,334.70
Fund 03 - HOTEL/MOTEL TAX FUND		
MONEY MARKET		
03-00-110-114	IL FUNDS HOTEL/MOTEL - 5948	619,346.90
	Net MONEY MARKET	619,346.90
SAVINGS		
03-00-110-257	COMMUNITY BANK OF WB - 0275	11,074.95
	Net SAVINGS	11,074.95
Fund 04 - MOTOR FUEL TAX FUND		
MONEY MARKET		
04-00-110-116	IL FUNDS MFT - 5443	448,014.84
	Net MONEY MARKET	448,014.84
Fund 06 - SSA ONE BOND & INTEREST FUND		
MONEY MARKET		
06-00-110-117	IL FUNDS SSA BOND - 4621	101,355.60
	Net MONEY MARKET	101,355.60
SAVINGS		
06-00-110-257	COMMUNITY BANK OF WB - 0275	162,847.85
	Net SAVINGS	162,847.85
Fund 07 - POLICE PENSION FUND		
MONEY MARKET		
07-00-110-202	COMMUNITY BANK OF WB PP - 4155	2,574.88
07-00-110-336	SCHWAB - PP MONEY MARKET	86,141.60
	Net MONEY MARKET	88,716.48
AGENCY CERTIFICATES		
07-00-120-260	US AGENCIES	5,694,392.35
	Net AGENCY CERTIFICATES	5,694,392.35
CORPORATE BONDS		
07-00-120-288	CORPORATE BONDS	1,800,182.95
	Net CORPORATE BONDS	1,800,182.95
MUNICIPAL BONDS		
07-00-120-270	MUNICIPAL BONDS	990,718.82
	Net MUNICIPAL BONDS	990,718.82

ACCOUNT BALANCE REPORT FOR WILLOWBROOK
PERIOD ENDING 10/31/2019
CASH & INVESTMENTS BY FUND AND ACCOUNT TYPE

GL NUMBER	DESCRIPTION	END BALANCE 10/31/2019
Fund 07 - POLICE PENSION FUND		
MUTUAL FUNDS		
07-00-120-290	MUTUAL FUNDS	13,207,496.46
	Net MUTUAL FUNDS	13,207,496.46
MARKET VALUE		
07-00-120-900	MARKET VALUE CONTRA	1,204,102.96
	Net MARKET VALUE	1,204,102.96
TREASURY NOTES		
07-00-120-250	US TREASURIES	457,550.88
	Net TREASURY NOTES	457,550.88
Fund 09 - WATER CAPITAL IMPROVEMENTS FUND		
MONEY MARKET		
09-00-110-324	IL FUNDS WTR CAP - 1206	440,881.31
	Net MONEY MARKET	440,881.31
Fund 10 - CAPITAL PROJECT FUND		
MONEY MARKET		
10-00-110-115	IL FUNDS CAP PROJECTS - 3133	674.60
	Net MONEY MARKET	674.60
Fund 11 - DEBT SERVICE FUND		
MONEY MARKET		
11-00-110-111	IL FUNDS BOND PROCEEDS DS - 2756	11.25
	Net MONEY MARKET	11.25
Fund 14 - LAND ACQUISITION, FACILITY, EXPANSION &		
MONEY MARKET		
14-00-110-112	IL FUNDS BOND PROCEEDS LAFER - 2772	0.02
14-00-110-322	IL FUNDS - 5435	22,019.00
	Net MONEY MARKET	22,019.02
Fund 15 - RT 83/PLAINFIELD RD BUSINESS DISTRCT TAX		
MONEY MARKET		
15-00-110-322	IL FUNDS BUSINESS DISTRICT - 5435	1,270,756.41
	Net MONEY MARKET	1,270,756.41

ACCOUNT BALANCE REPORT FOR WILLOWBROOK
PERIOD ENDING 10/31/2019
CASH & INVESTMENTS BY INSTITUTION

GL NUMBER	DESCRIPTION	END BALANCE 10/31/2019
COMMUNITY BANK OF WB		
01-00-110-257	COMMUNITY BANK OF WB - 0275	404,252.09
01-00-110-323	COMMUNITY BANK OF WB MM - 1771	305,484.07
01-00-110-325	COMMUNITY BANK RD LGHT - 0243	16,686.07
01-00-110-332	COMMUNITY BANK OF WB FSA - 3804	11,349.19
01-00-110-380	COMMUNITY BANK DRUG ACCT - 4171	82,078.77
02-00-110-209	COMMUNITY BANK OF WB WTR - 4163	545,230.62
03-00-110-257	COMMUNITY BANK OF WB - 0275	11,074.95
06-00-110-257	COMMUNITY BANK OF WB - 0275	162,847.85
07-00-110-202	COMMUNITY BANK OF WB PP - 4155	2,574.88
	Net COMMUNITY BANK OF WB	1,541,578.49
ILLINOIS FUNDS		
01-00-110-322	IL FUNDS - 5435	3,411,896.85
02-00-110-113	IL FUNDS WATER - 5914	1,053,104.08
03-00-110-114	IL FUNDS HOTEL/MOTEL - 5948	619,346.90
04-00-110-116	IL FUNDS MFT - 5443	448,014.84
06-00-110-117	IL FUNDS SSA BOND - 4621	101,355.60
09-00-110-324	IL FUNDS WTR CAP - 1206	440,881.31
10-00-110-115	IL FUNDS CAP PROJECTS - 3133	674.60
11-00-110-111	IL FUNDS BOND PROCEEDS DS - 2756	11.25
14-00-110-112	IL FUNDS BOND PROCEEDS LAFER - 2772	0.02
14-00-110-322	IL FUNDS - 5435	22,019.00
15-00-110-322	IL FUNDS BUSINESS DISTRICT - 5435	1,270,756.41
	Net ILLINOIS FUNDS	7,368,060.86
IMET		
01-00-120-155	IMET - GENERAL	29.15
	Net IMET	29.15
U.S. BANK		
01-00-110-335	U.S. BANK RED LIGHT - 4216	15,100.00
	Net U.S. BANK	15,100.00
VILLAGE OF WILLOWBROOK		
01-00-110-911	PETTY CASH REVLVING	950.00
	Net VILLAGE OF WILLOWBROOK	950.00
CHARLES SCHWAB		
07-00-110-336	SCHWAB - PP MONEY MARKET	86,141.60
07-00-120-250	US TREASURIES	457,550.88
07-00-120-260	US AGENCIES	5,694,392.35
07-00-120-270	MUNICIPAL BONDS	990,718.82
07-00-120-288	CORPORATE BONDS	1,800,182.95
07-00-120-290	MUTUAL FUNDS	13,207,496.46
07-00-120-900	MARKET VALUE CONTRA	1,204,102.96
	Net CHARLES SCHWAB	23,440,586.02
Total - All Funds:		32,366,304.52

INTERFUND ACTIVITY REPORT FOR WILLOWBROOK
Period Ending 10/31/2019
Due To/From Other Funds

GL Number	Description	Balance
Fund 01: GENERAL FUND		
Due From Other Funds		
01-00-140-102	DUE TO/FROM WATER FUND	(6,630.98)
01-00-140-107	DUE TO/FROM POLICE PENSION FUND	164,093.41
	Total Due From Other Funds	157,462.43
Fund 02: WATER FUND		
Due From Other Funds		
02-00-140-101	DUE TO/FROM GENERAL FUND	6,630.98
	Total Due From Other Funds	6,630.98
Fund 07: POLICE PENSION FUND		
Due From Other Funds		
07-00-140-101	DUE TO/FROM GENERAL FUND	(164,093.41)
	Total Due From Other Funds	(164,093.41)

REVENUE REPORT FOR WILLOWBROOK
PERIOD ENDING 10/31/2019

GL NUMBER	DESCRIPTION	ACTIVITY FOR MONTH 10/31/2019	YTD BALANCE 10/31/2019	2019-20 ORIGINAL BUDGET	% BDGT USED	AVAILABLE BALANCE
Fund 01 - GENERAL FUND						
PROPERTY TAX						
01-00-310-101	PROPERTY TAX LEVY - SRA	1,957.69	73,422.28	74,420.00	98.66	997.72
01-00-310-102	PROPERTY TAX LEVY - ROAD & BRIDGE	3,142.07	110,257.31	111,259.00	99.10	1,001.69
Net PROPERTY TAX		5,099.76	183,679.59	185,679.00	98.92	1,999.41
OTHER TAXES						
01-00-310-201	MUNICIPAL SALES TAX	380,773.10	2,211,284.91	4,000,000.00	55.28	1,788,715.09
01-00-310-202	ILLINOIS INCOME TAX	90,661.04	504,033.78	815,000.00	61.84	310,966.22
01-00-310-203	AMUSEMENT TAX	5,511.97	31,790.88	57,504.00	55.28	25,713.12
01-00-310-204	REPLACEMENT TAX	404.28	1,057.88	1,250.00	84.63	192.12
01-00-310-205	UTILITY TAX	70,250.35	405,779.95	898,000.00	45.19	492,220.05
01-00-310-208	PLACES OF EATING TAX	44,073.77	280,782.62	500,000.00	56.16	219,217.38
01-00-310-209	WATER TAX	12,516.57	83,935.63	160,000.00	52.46	76,064.37
01-00-310-210	WATER TAX - CLARENDON WATER CO	45.44	88.07	120.00	73.39	31.93
Net OTHER TAXES		604,236.52	3,518,753.72	6,431,874.00	54.71	2,913,120.28
LICENSES						
01-00-310-302	LIQUOR LICENSES	0.00	61,750.00	61,250.00	100.82	(500.00)
01-00-310-303	BUSINESS LICENSES	65.00	81,619.50	78,000.00	104.64	(3,619.50)
01-00-310-305	VENDING MACHINE	0.00	2,475.00	2,600.00	95.19	125.00
01-00-310-306	SCAVENGER LICENSES	0.00	7,000.00	7,000.00	100.00	0.00
Net LICENSES		65.00	152,844.50	148,850.00	102.68	(3,994.50)
PERMITS						
01-00-310-401	BUILDING PERMITS	58,336.60	224,162.81	275,000.00	81.51	50,837.19
01-00-310-402	SIGN PERMITS	871.00	4,510.45	5,000.00	90.21	489.55
01-00-310-403	OTHER PERMITS	0.00	84.00	500.00	16.80	416.00
01-00-310-404	COUNTY BMP FEE	0.00	2,371.00	2,000.00	118.55	(371.00)
01-00-310-405	SPECIAL HAULING PERMITS (OXCART)	480.00	1,095.00	0.00	100.00	(1,095.00)
Net PERMITS		59,687.60	232,223.26	282,500.00	82.20	50,276.74
FINES						
01-00-310-501	CIRCUIT COURT FINES	9,810.81	49,540.25	100,000.00	49.54	50,459.75
01-00-310-502	TRAFFIC FINES	2,875.00	16,975.00	25,000.00	67.90	8,025.00
01-00-310-503	RED LIGHT FINES	67,034.00	394,084.34	600,000.00	65.68	205,915.66
01-00-310-504	DUI FINES	0.00	474.58	0.00	100.00	(474.58)
01-00-310-505	OVERWEIGHT TRUCK FINES	1,122.50	2,663.02	0.00	100.00	(2,663.02)
Net FINES		80,842.31	463,737.19	725,000.00	63.96	261,262.81
OVERHEAD REIMBURSEMENT						
01-00-310-601	ADMINISTRATIVE SUPPORT REIMB - WATE	47,972.25	287,833.50	575,667.00	50.00	287,833.50
Net OVERHEAD REIMBURSEMENT		47,972.25	287,833.50	575,667.00	50.00	287,833.50
CHARGES & FEES						
01-00-310-700	PLANNING APPLICATION FEES	0.00	3,050.00	10,000.00	30.50	6,950.00
01-00-310-701	PUBLIC HEARING FEES	0.00	2,200.00	2,550.00	86.27	350.00
01-00-310-702	PLANNING REVIEW FEES	0.00	0.00	2,500.00	0.00	2,500.00

GL NUMBER	DESCRIPTION	ACTIVITY FOR MONTH 10/31/2019	YTD BALANCE 10/31/2019	2019-20 ORIGINAL BUDGET	% BDGT USED	AVAILABLE BALANCE
Fund 01 - GENERAL FUND						
01-00-310-704	ACCIDENT REPORT COPIES	195.00	1,550.00	2,000.00	77.50	450.00
01-00-310-705	VIDEO GAMING FEES	4,223.01	27,568.34	36,000.00	76.58	8,431.66
01-00-310-706	COPIES-ORDINANCES & MAPS	0.00	0.00	50.00	0.00	50.00
01-00-310-723	ELEVATOR INSPECTION FEES	75.00	1,200.00	5,000.00	24.00	3,800.00
01-00-310-724	BURGLAR ALARM FEES	0.00	0.00	10,000.00	0.00	10,000.00
Net CHARGES & FEES		4,493.01	35,568.34	68,100.00	52.23	32,531.66
PARK & RECREATION CHARGES						
01-00-310-813	PARK & REC CONTRIBUTION	200.00	2,000.00	2,500.00	80.00	500.00
01-00-310-814	PARK PERMIT FEES	(915.00)	(658.00)	3,000.00	(21.93)	3,658.00
01-00-310-815	SUMMER RECREATION FEES	0.00	1,985.00	8,750.00	22.69	6,765.00
01-00-310-817	SPECIAL EVENTS	0.00	1,490.00	3,600.00	41.39	2,110.00
01-00-310-818	FALL RECREATION FEES	0.00	0.00	200.00	0.00	200.00
01-00-310-819	BURR RIDGE/WILLOWBROOK BASEBALL R	0.00	0.00	6,500.00	0.00	6,500.00
01-00-310-820	HOLIDAY CONTRIBUTION	1,600.00	1,600.00	4,000.00	40.00	2,400.00
01-00-310-823	SPRING RECREATION FEES	0.00	0.00	200.00	0.00	200.00
Net PARK & RECREATION CHARGES		885.00	6,417.00	28,750.00	22.32	22,333.00
OTHER REVENUE						
01-00-310-901	REIMBURSEMENTS - IRMA	0.00	4,974.88	0.00	100.00	(4,974.88)
01-00-310-909	SALE - FIXED ASSETS	0.00	8,000.00	7,500.00	106.67	(500.00)
01-00-310-910	REIMBURSEMENTS - TREE PLANTING	0.00	900.00	500.00	180.00	(400.00)
01-00-310-911	ATS RED LIGHT ENERGY REIMBURSEMENT	122.99	833.91	1,320.00	63.18	486.09
01-00-310-912	REIMBURSEMENTS-BRUSH PICK-UP	0.00	5,495.04	11,600.00	47.37	6,104.96
01-00-310-913	OTHER RECEIPTS	2,911.41	11,771.91	20,000.00	58.86	8,228.09
01-00-310-915	REIMBURSEMENTS - POLICE SPECIAL DET	0.00	0.00	4,000.00	0.00	4,000.00
01-00-310-916	DONATIONS	0.00	1,000.00	0.00	100.00	(1,000.00)
01-00-310-921	OTHER GRANTS	0.00	9,362.00	0.00	100.00	(9,362.00)
01-00-310-922	FEDERAL/STATE GRANTS	0.00	110,550.00	72,788.00	151.88	(37,762.00)
01-00-310-925	NICOR GAS ANNUAL PAYMENT	0.00	0.00	14,000.00	0.00	14,000.00
01-00-310-926	CABLE FRANCHISE FEES	14,588.69	102,368.27	216,000.00	47.39	113,631.73
01-00-310-928	DRUG FORFEITURES - STATE	0.00	0.00	5,000.00	0.00	5,000.00
01-00-310-929	DRUG FORFEITURES - FEDERAL	0.00	0.00	6,000.00	0.00	6,000.00
Net OTHER REVENUE		17,623.09	255,256.01	358,708.00	71.16	103,451.99
NON-OPERATING						
01-00-320-108	INTEREST INCOME	7,744.70	49,620.31	24,000.00	206.75	(25,620.31)
Net NON-OPERATING		7,744.70	49,620.31	24,000.00	206.75	(25,620.31)
Fund 01 - GENERAL FUND:						
TOTAL REVENUES		828,649.24	5,185,933.42	8,829,128.00	58.74	3,643,194.58
Fund 02 - WATER FUND						
CHARGES & FEES						

GL NUMBER	DESCRIPTION	ACTIVITY FOR MONTH 10/31/2019	YTD BALANCE 10/31/2019	2019-20 ORIGINAL BUDGET	% BDGT USED	AVAILABLE BALANCE
Fund 02 - WATER FUND						
02-00-310-712	WATER USAGE	250,311.36	1,684,123.53	3,200,000.00	52.63	1,515,876.47
02-00-310-713	WATER PENALTIES	1,012.18	6,037.97	5,000.00	120.76	(1,037.97)
02-00-310-718	SHUTOFF/NSF FEE	90.00	3,925.00	2,500.00	157.00	(1,425.00)
Net CHARGES & FEES		251,413.54	1,694,086.50	3,207,500.00	52.82	1,513,413.50
OTHER REVENUE						
02-00-310-714	WATER METER SALES	2,665.43	4,773.84	3,000.00	159.13	(1,773.84)
02-00-310-716	WATER METER READING FEES	193.00	3,346.25	5,000.00	66.93	1,653.75
02-00-310-717	CONSTRUCTION USAGE	200.00	835.00	1,000.00	83.50	165.00
Net OTHER REVENUE		3,058.43	8,955.09	9,000.00	99.50	44.91
NON-OPERATING						
02-00-320-108	INTEREST INCOME	1,819.45	12,542.76	12,000.00	104.52	(542.76)
02-00-320-713	WATER CONNECTION FEES	600.00	3,000.00	3,000.00	100.00	0.00
Net NON-OPERATING		2,419.45	15,542.76	15,000.00	103.62	(542.76)
Fund 02 - WATER FUND:						
TOTAL REVENUES		256,891.42	1,718,584.35	3,231,500.00	53.18	1,512,915.65
Fund 03 - HOTEL/MOTEL TAX FUND						
OTHER TAXES						
03-00-310-205	HOTEL/MOTEL TAX	19,659.77	143,682.68	248,000.00	57.94	104,317.32
Net OTHER TAXES		19,659.77	143,682.68	248,000.00	57.94	104,317.32
NON-OPERATING						
03-00-320-108	INTEREST INCOME	929.32	5,786.42	6,000.00	96.44	213.58
Net NON-OPERATING		929.32	5,786.42	6,000.00	96.44	213.58
Fund 03 - HOTEL/MOTEL TAX FUND:						
TOTAL REVENUES		20,589.09	149,469.10	254,000.00	58.85	104,530.90
Fund 04 - MOTOR FUEL TAX FUND						
OTHER TAXES						
04-00-310-216	MFT RECEIPTS	30,847.02	131,004.49	217,343.00	60.28	86,338.51
Net OTHER TAXES		30,847.02	131,004.49	217,343.00	60.28	86,338.51
NON-OPERATING						
04-00-320-108	INTEREST INCOME	716.73	4,433.69	4,500.00	98.53	66.31
Net NON-OPERATING		716.73	4,433.69	4,500.00	98.53	66.31

GL NUMBER	DESCRIPTION	ACTIVITY FOR MONTH 10/31/2019	YTD BALANCE 10/31/2019	2019-20 ORIGINAL BUDGET	% BDGT USED	AVAILABLE BALANCE
Fund 04 - MOTOR FUEL TAX FUND						
Fund 04 - MOTOR FUEL TAX FUND:						
TOTAL REVENUES		31,563.75	135,438.18	221,843.00	61.05	86,404.82
Fund 06 - SSA ONE BOND & INTEREST FUND						
PROPERTY TAX						
06-00-310-101	PROPERTY TAX RECEIPTS	0.00	325,713.54	322,465.00	101.01	(3,248.54)
Net PROPERTY TAX		0.00	325,713.54	322,465.00	101.01	(3,248.54)
NON-OPERATING						
06-00-320-108	INTEREST INCOME	165.11	824.58	500.00	164.92	(324.58)
Net NON-OPERATING		165.11	824.58	500.00	164.92	(324.58)
Fund 06 - SSA ONE BOND & INTEREST FUND:						
TOTAL REVENUES		165.11	326,538.12	322,965.00	101.11	(3,573.12)
Fund 07 - POLICE PENSION FUND						
OTHER REVENUE						
07-00-310-607	VILLAGE CONTRIBUTION	75,912.16	495,053.96	986,858.00	50.16	491,804.04
07-00-310-906	POLICE CONTRIBUTIONS	15,150.69	100,275.10	206,484.00	48.56	106,208.90
Net OTHER REVENUE		91,062.85	595,329.06	1,193,342.00	49.89	598,012.94
NON-OPERATING						
07-00-320-108	INTEREST INCOME	21,460.77	228,364.34	500,000.00	45.67	271,635.66
07-00-320-110	UNREALIZED GAIN (LOSS) ON INVESTMENT	296,276.73	767,772.24	0.00	100.00	(767,772.24)
07-00-320-111	GAIN (LOSS) ON INVESTMENTS	(2,700.23)	(170,168.77)	0.00	100.00	170,168.77
07-00-320-112	CONTRIBUTIONS/DONATIONS	0.00	50.00	0.00	100.00	(50.00)
Net NON-OPERATING		315,037.27	826,017.81	500,000.00	165.20	(326,017.81)
Fund 07 - POLICE PENSION FUND:						
TOTAL REVENUES		406,100.12	1,421,346.87	1,693,342.00	83.94	271,995.13
Fund 09 - WATER CAPITAL IMPROVEMENTS FUND						
NON-OPERATING						
09-00-320-108	INTEREST INCOME	718.23	4,990.01	6,000.00	83.17	1,009.99
Net NON-OPERATING		718.23	4,990.01	6,000.00	83.17	1,009.99

GL NUMBER	DESCRIPTION	ACTIVITY FOR MONTH 10/31/2019	YTD BALANCE 10/31/2019	2019-20 ORIGINAL BUDGET	% BDGT USED	AVAILABLE BALANCE
Fund 09 - WATER CAPITAL IMPROVEMENTS FUND						
TRANSFERS IN						
09-00-330-102	TRANSFER FROM WATER	0.00	0.00	400,000.00	0.00	400,000.00
Net TRANSFERS IN		0.00	0.00	400,000.00	0.00	400,000.00
Fund 09 - WATER CAPITAL IMPROVEMENTS FUND:						
TOTAL REVENUES		718.23	4,990.01	406,000.00	1.23	401,009.99
Fund 10 - CAPITAL PROJECT FUND						
NON-OPERATING						
10-00-320-108	INTEREST INCOME	1.14	7.45	0.00	100.00	(7.45)
Net NON-OPERATING		1.14	7.45	0.00	100.00	(7.45)
Fund 10 - CAPITAL PROJECT FUND:						
TOTAL REVENUES		1.14	7.45	0.00	100.00	(7.45)
Fund 11 - DEBT SERVICE FUND						
TRANSFERS IN						
11-00-330-101	TRANSFER FROM GENERAL FUND	0.00	51,386.50	278,873.00	18.43	227,486.50
11-00-330-102	TRANSFER FROM WATER	0.00	4,685.50	47,471.00	9.87	42,785.50
Net TRANSFERS IN		0.00	56,072.00	326,344.00	17.18	270,272.00
Fund 11 - DEBT SERVICE FUND:						
TOTAL REVENUES		0.00	56,072.00	326,344.00	17.18	270,272.00
Fund 14 - LAND ACQUISITION, FACILITY, EXPANSION &						
TRANSFERS IN						
14-00-330-101	TRANSFER FROM GENERAL FUND	0.00	24,769.25	120,000.00	20.64	95,230.75
Net TRANSFERS IN		0.00	24,769.25	120,000.00	20.64	95,230.75
Fund 14 - LAND ACQUISITION, FACILITY, EXPANSION & :						
TOTAL REVENUES		0.00	24,769.25	120,000.00	20.64	95,230.75

GL NUMBER	DESCRIPTION	ACTIVITY FOR MONTH 10/31/2019	YTD BALANCE 10/31/2019	2019-20 ORIGINAL BUDGET	% BDGT USED	AVAILABLE BALANCE
Fund 15 - RT 83/PLAINFIELD RD BUSINESS DISTRCT TAX						
OTHER TAXES						
15-00-310-201	BUSINESS DISTRICT SALES TAX TOWN CE	56,042.90	329,065.07	485,000.00	67.85	155,934.93
Net OTHER TAXES		56,042.90	329,065.07	485,000.00	67.85	155,934.93
Fund 15 - RT 83/PLAINFIELD RD BUSINESS DISTRCT TAX:						
TOTAL REVENUES		56,042.90	329,065.07	485,000.00	67.85	155,934.93
TOTAL REVENUES - ALL FUNDS		1,600,721.00	9,352,213.82	15,890,122.00	58.86	6,537,908.18

GL NUMBER	DESCRIPTION	ACTIVITY FOR MONTH 10/31/19	YTD BALANCE 10/31/2019	2019-20 ORIGINAL BUDGET	% BDGT USED	AVAILABLE BALANCE	APPROP.	APPROP. AVAIL.
Fund 01 - GENERAL FUND								
Dept 05 - VILLAGE BOARD & CLERK								
GENERAL MANAGEMENT								
01-05-400-147	MEDICARE	70.64	457.17	922.00	49.58	464.83	1,844.00	1,386.83
01-05-400-161	SOCIAL SECURITY	302.02	1,954.73	3,943.00	49.57	1,988.27	7,886.00	5,931.27
01-05-410-101	SALARIES - MAYOR & VILLAGE	4,000.00	26,300.00	56,400.00	46.63	30,100.00	112,800.00	86,500.00
01-05-410-125	SALARY - VILLAGE CLERK	600.00	3,600.00	7,200.00	50.00	3,600.00	14,400.00	10,800.00
01-05-410-141	LIFE INSURANCE - ELECTED OF	63.84	394.80	816.00	48.38	421.20	1,632.00	1,237.20
01-05-410-201	PHONE - TELEPHONES	56.71	338.51	696.00	48.64	357.49	1,392.00	1,053.49
01-05-410-301	OFFICE SUPPLIES	0.00	0.00	500.00	0.00	500.00	1,000.00	1,000.00
01-05-410-302	PRINTING & PUBLISHING	0.00	40.00	0.00	100.00	(40.00)	0.00	(40.00)
01-05-410-303	FUEL/MILEAGE/WASH	0.00	0.00	100.00	0.00	100.00	200.00	200.00
01-05-410-304	SCHOOLS/CONFERENCES/TRA	71.38	934.38	5,770.00	16.19	4,835.62	11,540.00	10,605.62
01-05-410-305	STRATEGIC PLANNING	0.00	0.00	5,000.00	0.00	5,000.00	10,000.00	10,000.00
01-05-410-307	FEES/DUES/SUBSCRIPTIONS	0.00	40.00	2,341.00	1.71	2,301.00	4,682.00	4,642.00
GENERAL MANAGEMENT		5,164.59	34,059.59	83,688.00	40.70	49,628.41	167,376.00	133,316.41
COMMUNITY RELATIONS								
01-05-420-365	PUBLIC RELATIONS	0.00	47.95	500.00	9.59	452.05	1,000.00	952.05
COMMUNITY RELATIONS		0.00	47.95	500.00	9.59	452.05	1,000.00	952.05
DATA PROCESSING								
01-05-417-212	EDP EQUIPMENT/SOFTWARE	0.00	0.00	6,000.00	0.00	6,000.00	12,000.00	12,000.00
DATA PROCESSING		0.00	0.00	6,000.00	0.00	6,000.00	12,000.00	12,000.00
Total Dept 05 - VILLAGE BOARD & CLERK		5,164.59	34,107.54	90,188.00	37.82	56,080.46	180,376.00	146,268.46
Dept 07 - BOARD OF POLICE COMMISSIONERS								
ADMINISTRATION								
01-07-400-147	MEDICARE	0.00	0.00	9.00	0.00	9.00	18.00	18.00
01-07-400-161	SOCIAL SECURITY	0.00	0.00	37.00	0.00	37.00	74.00	74.00
01-07-435-148	LIFE INSURANCE - COMMISSIO	18.48	110.88	274.00	40.47	163.12	548.00	437.12
01-07-435-239	FEES - BOPC ATTORNEY	0.00	0.00	6,000.00	0.00	6,000.00	12,000.00	12,000.00
01-07-435-301	OFFICE SUPPLIES	0.00	0.00	100.00	0.00	100.00	200.00	200.00
01-07-435-302	PRINTING & PUBLISHING	0.00	0.00	4,000.00	0.00	4,000.00	8,000.00	8,000.00
01-07-435-304	SCHOOLS/CONFERENCES/TRA	0.00	0.00	1,000.00	0.00	1,000.00	2,000.00	2,000.00
01-07-435-307	FEES/DUES/SUBSCRIPTIONS	0.00	0.00	500.00	0.00	500.00	1,000.00	1,000.00
01-07-435-311	POSTAGE & METER RENT	0.00	0.00	500.00	0.00	500.00	1,000.00	1,000.00
ADMINISTRATION		18.48	110.88	12,420.00	0.89	12,309.12	24,840.00	24,729.12
OTHER								
01-07-440-542	EXAMS - WRITTEN	0.00	0.00	20,000.00	0.00	20,000.00	40,000.00	40,000.00
01-07-440-543	EXAMS - PHYSICAL	0.00	0.00	2,000.00	0.00	2,000.00	4,000.00	4,000.00
01-07-440-544	EXAMS - PSYCHOLOGICAL	500.00	500.00	2,500.00	20.00	2,000.00	5,000.00	4,500.00
01-07-440-545	EXAMS - POLYGRAPH	0.00	160.00	1,000.00	16.00	840.00	2,000.00	1,840.00
OTHER		500.00	660.00	25,500.00	2.59	24,840.00	51,000.00	50,340.00

GL NUMBER	DESCRIPTION	ACTIVITY FOR MONTH 10/31/19	YTD BALANCE 10/31/2019	2019-20 ORIGINAL BUDGET	% BDGT USED	AVAILABLE BALANCE	APPROP.	APPROP. AVAIL.
Fund 01 - GENERAL FUND								
Total Dept 07 - BOARD OF POLICE COMMISSIONERS		518.48	770.88	37,920.00	2.03	37,149.12	75,840.00	75,069.12
Dept 10 - ADMINISTRATION								
GENERAL MANAGEMENT								
01-10-400-147	MEDICARE	388.74	3,312.58	4,299.00	77.05	986.42	8,598.00	5,285.42
01-10-400-151	IMRF	3,341.07	28,254.52	35,038.00	80.64	6,783.48	70,076.00	41,821.48
01-10-400-161	SOCIAL SECURITY	1,662.17	11,636.61	15,738.00	73.94	4,101.39	31,476.00	19,839.39
01-10-400-171	SUI - UNEMPLOYMENT	(0.28)	122.65	233.00	52.64	110.35	466.00	343.35
01-10-455-101	SALARIES - MANAGEMENT STA	13,192.32	111,685.06	134,137.00	83.26	22,451.94	268,274.00	156,588.94
01-10-455-102	OVERTIME	99.78	1,593.86	5,000.00	31.88	3,406.14	10,000.00	8,406.14
01-10-455-105	ASSISTANT VILLAGE ADMINIST	9,769.28	43,961.76	91,750.00	47.91	47,788.24	183,500.00	139,538.24
01-10-455-107	ADMINISTRATIVE INTERN	0.00	0.00	9,984.00	0.00	9,984.00	19,968.00	19,968.00
01-10-455-126	SALARIES - CLERICAL	4,257.12	27,632.76	55,342.00	49.93	27,709.24	110,684.00	83,051.24
01-10-455-131	PERSONNEL RECRUITMENT	0.00	6,544.80	700.00	934.97	(5,844.80)	1,400.00	(5,144.80)
01-10-455-141	HEALTH/DENTAL/LIFE INSURAN	4,361.85	21,977.62	70,135.00	31.34	48,157.38	140,270.00	118,292.38
01-10-455-201	PHONE - TELEPHONES	888.49	7,509.26	25,051.00	29.98	17,541.74	50,102.00	42,592.74
01-10-455-266	CODIFY ORDINANCES	6,549.00	6,549.00	2,500.00	261.96	(4,049.00)	5,000.00	(1,549.00)
01-10-455-301	OFFICE SUPPLIES	391.79	3,165.46	10,000.00	31.65	6,834.54	20,000.00	16,834.54
01-10-455-302	PRINTING & PUBLISHING	0.00	1,229.04	2,500.00	49.16	1,270.96	5,000.00	3,770.96
01-10-455-303	FUEL/MILEAGE/WASH	36.00	228.60	1,500.00	15.24	1,271.40	3,000.00	2,771.40
01-10-455-304	SCHOOLS/CONFERENCES/TRA	0.00	30.00	2,000.00	1.50	1,970.00	4,000.00	3,970.00
01-10-455-305	STRATEGIC PLANNING	0.00	0.00	2,000.00	0.00	2,000.00	4,000.00	4,000.00
01-10-455-306	CONSULTING	0.00	32,484.36	0.00	100.00	(32,484.36)	0.00	(32,484.36)
01-10-455-307	FEES/DUES/SUBSCRIPTIONS	(2,500.00)	10,005.44	13,000.00	76.96	2,994.56	26,000.00	15,994.56
01-10-455-311	POSTAGE & METER RENT	(25.95)	1,553.44	5,000.00	31.07	3,446.56	10,000.00	8,446.56
01-10-455-315	COPY SERVICE	517.50	3,158.91	4,800.00	65.81	1,641.09	9,600.00	6,441.09
01-10-455-355	COMMISSARY PROVISION	272.39	1,238.05	1,500.00	82.54	261.95	3,000.00	1,761.95
01-10-455-409	MAINTENANCE - VEHICLES	0.00	0.00	2,000.00	0.00	2,000.00	4,000.00	4,000.00
01-10-455-411	MAINTENANCE - EQUIPMENT	0.00	0.00	500.00	0.00	500.00	1,000.00	1,000.00
GENERAL MANAGEMENT		43,201.27	323,873.78	494,707.00	65.47	170,833.22	989,414.00	665,540.22
COMMUNITY RELATIONS								
01-10-475-365	PUBLIC RELATIONS	0.00	2,404.50	5,000.00	48.09	2,595.50	10,000.00	7,595.50
01-10-475-366	NEWSLETTER	0.00	0.00	500.00	0.00	500.00	1,000.00	1,000.00
01-10-475-367	CRISIS MANAGEMENT	61,326.82	162,286.45	300,000.00	54.10	137,713.55	600,000.00	437,713.55
01-10-475-370	MEALS-ON-WHEELS	0.00	0.00	2,000.00	0.00	2,000.00	4,000.00	4,000.00
01-10-475-372	SENIOR CITIZEN TAXI PROGRA	0.00	10.00	0.00	100.00	(10.00)	0.00	(10.00)
COMMUNITY RELATIONS		61,326.82	164,700.95	307,500.00	53.56	142,799.05	615,000.00	450,299.05
CAPITAL IMPROVEMENTS								
01-10-485-602	BUILDING IMPROVEMENTS	0.00	24,500.00	460,507.00	5.32	436,007.00	921,014.00	896,514.00
01-10-485-611	FURNITURE & OFFICE EQUIPME	0.00	0.00	2,500.00	0.00	2,500.00	5,000.00	5,000.00
CAPITAL IMPROVEMENTS		0.00	24,500.00	463,007.00	5.29	438,507.00	926,014.00	901,514.00
DATA PROCESSING								
01-10-460-212	EDP EQUIPMENT/SOFTWARE	1,322.50	26,853.99	27,863.00	96.38	1,009.01	55,726.00	28,872.01
01-10-460-225	INTERNET/WEBSITE HOSTING	225.54	1,127.70	8,343.00	13.52	7,215.30	16,686.00	15,558.30

GL NUMBER	DESCRIPTION	ACTIVITY FOR MONTH 10/31/19	YTD BALANCE 10/31/2019	2019-20 ORIGINAL BUDGET	% BDGT USED	AVAILABLE BALANCE	APPROP.	APPROP. AVAIL.
Fund 01 - GENERAL FUND								
01-10-460-263	EDP LICENSES	2,325.00	10,013.87	2,325.00	430.70	(7,688.87)	4,650.00	(5,363.87)
01-10-460-267	DOCUMENT STORAGE/SCANNI	0.00	2,945.00	2,740.00	107.48	(205.00)	5,480.00	2,535.00
01-10-460-305	EDP PERSONNEL TRAINING	0.00	200.00	500.00	40.00	300.00	1,000.00	800.00
01-10-460-331	OPERATING SUPPLIES	0.00	0.00	500.00	0.00	500.00	1,000.00	1,000.00
DATA PROCESSING		3,873.04	41,140.56	42,271.00	97.33	1,130.44	84,542.00	43,401.44
BUILDINGS								
01-10-466-228	MAINTENANCE - BUILDING	11,212.41	33,242.72	50,000.00	66.49	16,757.28	100,000.00	66,757.28
01-10-466-236	NICOR GAS (835 MIDWAY)	37.62	198.16	2,000.00	9.91	1,801.84	4,000.00	3,801.84
01-10-466-240	ENERGY/COMED (835 MIDWAY)	509.85	763.47	2,500.00	30.54	1,736.53	5,000.00	4,236.53
01-10-466-251	SANITARY (835 MIDWAY)	0.00	45.96	800.00	5.75	754.04	1,600.00	1,554.04
01-10-466-293	LANDSCAPE - VILLAGE HALL	0.00	150.00	1,500.00	10.00	1,350.00	3,000.00	2,850.00
01-10-466-351	BUILDING MAINTENANCE SUPP	0.00	471.01	5,000.00	9.42	4,528.99	10,000.00	9,528.99
BUILDINGS		11,759.88	34,871.32	61,800.00	56.43	26,928.68	123,600.00	88,728.68
LEGAL								
01-10-470-239	FEES - VILLAGE ATTORNEY	11,377.92	85,483.47	70,000.00	122.12	(15,483.47)	140,000.00	54,516.53
01-10-470-241	FEES - SPECIAL ATTORNEY	0.00	475.00	7,500.00	6.33	7,025.00	15,000.00	14,525.00
01-10-470-242	FEES - LABOR COUNSEL	38.00	970.70	0.00	100.00	(970.70)	0.00	(970.70)
LEGAL		11,415.92	86,929.17	77,500.00	112.17	(9,429.17)	155,000.00	68,070.83
RISK MANAGEMENT								
01-10-480-272	INSURANCE - IRMA	0.00	0.00	230,960.00	0.00	230,960.00	461,920.00	461,920.00
01-10-480-273	SELF INSURANCE - DEDUCTIBL	0.00	11,111.50	10,000.00	111.12	(1,111.50)	20,000.00	8,888.50
01-10-480-276	WELLNESS	0.00	0.00	4,870.00	0.00	4,870.00	9,740.00	9,740.00
RISK MANAGEMENT		0.00	11,111.50	245,830.00	4.52	234,718.50	491,660.00	480,548.50
TRANSFERS TO OTHER FUNDS								
01-10-900-112	TRANSFER TO DEBT SERVICE -	0.00	51,386.50	278,873.00	18.43	227,486.50	557,746.00	506,359.50
01-10-900-114	TRANSFER TO LAFER	0.00	24,769.25	120,000.00	20.64	95,230.75	240,000.00	215,230.75
TRANSFERS TO OTHER FUNDS		0.00	76,155.75	398,873.00	19.09	322,717.25	797,746.00	721,590.25
Total Dept 10 - ADMINISTRATION		131,576.93	763,283.03	2,091,488.00	36.49	1,328,204.97	4,182,976.00	3,419,692.97
Dept 15 - PLANNING & ECONOMIC DEVELOPMENT								
GENERAL MANAGEMENT								
01-15-400-147	MEDICARE	24.30	155.71	338.00	46.07	182.29	676.00	520.29
01-15-400-151	IMRF	214.62	1,370.24	2,852.00	48.04	1,481.76	5,704.00	4,333.76
01-15-400-161	SOCIAL SECURITY	103.99	666.09	1,446.00	46.06	779.91	2,892.00	2,225.91
01-15-400-171	SUI - UNEMPLOYMENT	0.00	0.00	31.00	0.00	31.00	62.00	62.00
01-15-510-102	OVERTIME	0.00	0.00	500.00	0.00	500.00	1,000.00	1,000.00
01-15-510-126	SALARIES - CLERICAL	1,754.94	11,204.16	22,816.00	49.11	11,611.84	45,632.00	34,427.84
01-15-510-141	HEALTH/DENTAL/LIFE INSURAN	588.89	3,717.76	7,804.00	47.64	4,086.24	15,608.00	11,890.24
01-15-510-232	CONSULTANTS - DESIGN & OTH	0.00	0.00	45,000.00	0.00	45,000.00	90,000.00	90,000.00
01-15-510-301	OFFICE SUPPLIES	0.00	0.00	250.00	0.00	250.00	500.00	500.00
01-15-510-302	PRINTING & PUBLISHING	0.00	1,462.92	2,000.00	73.15	537.08	4,000.00	2,537.08

GL NUMBER	DESCRIPTION	ACTIVITY FOR MONTH 10/31/19	YTD BALANCE 10/31/2019	2019-20 ORIGINAL BUDGET	% BDGT USED	AVAILABLE BALANCE	APPROP.	APPROP. AVAIL.
Fund 01 - GENERAL FUND								
01-15-510-304	SCHOOLS/CONFERENCES/TRA	0.00	0.00	500.00	0.00	500.00	1,000.00	1,000.00
01-15-510-307	FEES/DUES/SUBSCRIPTIONS	0.00	323.15	500.00	64.63	176.85	1,000.00	676.85
01-15-510-311	POSTAGE & METER RENT	0.00	52.32	500.00	10.46	447.68	1,000.00	947.68
01-15-510-340	LIFE INSURANCE - PLAN COMMI	70.56	423.36	1,002.00	42.25	578.64	2,004.00	1,580.64
01-15-510-401	OPERATING EQUIPMENT	0.00	0.00	500.00	0.00	500.00	1,000.00	1,000.00
GENERAL MANAGEMENT		2,757.30	19,375.71	86,039.00	22.52	66,663.29	172,078.00	152,702.29
DATA PROCESSING								
01-15-515-305	EDP PERSONNEL TRAINING	0.00	0.00	1,800.00	0.00	1,800.00	3,600.00	3,600.00
DATA PROCESSING		0.00	0.00	1,800.00	0.00	1,800.00	3,600.00	3,600.00
ENGINEERING								
01-15-520-229	RENT - MEETING ROOM	0.00	0.00	250.00	0.00	250.00	500.00	500.00
01-15-520-245	FEES - ENGINEERING	0.00	0.00	2,500.00	0.00	2,500.00	5,000.00	5,000.00
01-15-520-246	FEES - COURT REPORTER	0.00	1,466.00	1,500.00	97.73	34.00	3,000.00	1,534.00
01-15-520-254	PLAN REVIEW - ENGINEER	0.00	1,018.11	5,000.00	20.36	3,981.89	10,000.00	8,981.89
01-15-520-257	PLAN REVIEW - PLANNER	11,690.98	75,216.24	80,000.00	94.02	4,783.76	160,000.00	84,783.76
01-15-520-258	PLAN REVIEW - TRAFFIC CONS	391.50	548.10	3,000.00	18.27	2,451.90	6,000.00	5,451.90
ENGINEERING		12,082.48	78,248.45	92,250.00	84.82	14,001.55	184,500.00	106,251.55
Total Dept 15 - PLANNING & ECONOMIC DEVELOPMEN		14,839.78	97,624.16	180,089.00	54.21	82,464.84	360,178.00	262,553.84
Dept 20 - PARKS & RECREATION								
CAPITAL IMPROVEMENTS								
01-20-595-692	LANDSCAPING	430.00	4,630.00	1,000.00	463.00	(3,630.00)	2,000.00	(2,630.00)
01-20-595-693	COURT IMPROVEMENTS	172.49	679.15	1,500.00	45.28	820.85	3,000.00	2,320.85
01-20-595-695	PARK IMPROVEMENTS - NEIGH	180.00	17,099.40	2,000.00	854.97	(15,099.40)	4,000.00	(13,099.40)
CAPITAL IMPROVEMENTS		782.49	22,408.55	4,500.00	497.97	(17,908.55)	9,000.00	(13,408.55)
ADMINISTRATION								
01-20-400-147	MEDICARE	41.18	380.03	762.00	49.87	381.97	1,524.00	1,143.97
01-20-400-151	IMRF	344.08	2,831.57	4,649.00	60.91	1,817.43	9,298.00	6,466.43
01-20-400-161	SOCIAL SECURITY	176.03	1,624.90	3,259.00	49.86	1,634.10	6,518.00	4,893.10
01-20-400-171	SUI - UNEMPLOYMENT	0.20	32.68	131.00	24.95	98.32	262.00	229.32
01-20-550-101	SALARIES - PERMANENT EMPL	2,278.31	17,354.00	34,596.00	50.16	17,242.00	69,192.00	51,838.00
01-20-550-104	PART TIME - CLERICAL	0.00	0.00	10,973.00	0.00	10,973.00	21,946.00	21,946.00
01-20-550-148	LIFE INSURANCE - COMMISSIO	72.24	433.44	1,113.00	38.94	679.56	2,226.00	1,792.56
01-20-550-201	EMERGENCY TELEPHONE LINE	0.00	0.00	100.00	0.00	100.00	200.00	200.00
01-20-550-302	PRINTING & PUBLISHING	0.00	6,354.40	16,500.00	38.51	10,145.60	33,000.00	26,645.60
01-20-550-303	FUEL/MILEAGE/WASH	0.00	0.00	250.00	0.00	250.00	500.00	500.00
01-20-550-311	POSTAGE & METER RENT	0.00	264.60	2,500.00	10.58	2,235.40	5,000.00	4,735.40
ADMINISTRATION		2,912.04	29,275.62	74,833.00	39.12	45,557.38	149,666.00	120,390.38
DATA PROCESSING								
01-20-555-212	EDP EQUIPMENT/SOFTWARE	0.00	0.00	6,000.00	0.00	6,000.00	12,000.00	12,000.00
01-20-555-306	CONSULTING SERVICES	0.00	0.00	7,500.00	0.00	7,500.00	15,000.00	15,000.00

GL NUMBER	DESCRIPTION	ACTIVITY FOR MONTH 10/31/19	YTD BALANCE 10/31/2019	2019-20 ORIGINAL BUDGET	% BDGT USED	AVAILABLE BALANCE	APPROP.	APPROP. AVAIL.
Fund 01 - GENERAL FUND								
DATA PROCESSING		0.00	0.00	13,500.00	0.00	13,500.00	27,000.00	27,000.00
LANDSCAPING								
01-20-565-341	PARK LANDSCAPE SUPPLIES	0.00	3,202.07	7,400.00	43.27	4,197.93	14,800.00	11,597.93
01-20-565-342	LANDSCAPE MAINTENANCE SE	2,115.00	32,917.10	54,900.00	59.96	21,982.90	109,800.00	76,882.90
LANDSCAPING		2,115.00	36,119.17	62,300.00	57.98	26,180.83	124,600.00	88,480.83
MAINTENANCE								
01-20-570-102	OVERTIME	535.09	6,165.57	7,000.00	88.08	834.43	14,000.00	7,834.43
01-20-570-103	PART TIME - LABOR	42.00	2,894.42	1,500.00	192.96	(1,394.42)	3,000.00	105.58
01-20-570-228	MAINTENANCE - PARK BUILDIN	471.88	10,111.14	2,386.00	423.77	(7,725.14)	4,772.00	(5,339.14)
01-20-570-234	RENT - EQUIPMENT	0.00	0.00	300.00	0.00	300.00	600.00	600.00
01-20-570-235	NICOR GAS (825 MIDWAY)	35.36	221.81	1,200.00	18.48	978.19	2,400.00	2,178.19
01-20-570-240	ENERGY/COMED (825 MIDWAY)	0.00	0.00	1,000.00	0.00	1,000.00	2,000.00	2,000.00
01-20-570-250	SANITARY (825 MIDWAY)	0.00	0.00	50.00	0.00	50.00	100.00	100.00
01-20-570-278	SANITARY USER CHARGE - PAR	34.51	51.56	3,000.00	1.72	2,948.44	6,000.00	5,948.44
01-20-570-280	BALLFIELD MAINTENANCE/SUP	450.00	7,004.97	6,500.00	107.77	(504.97)	13,000.00	5,995.03
01-20-570-281	CONTRACTED MAINTENANCE	0.00	29,624.55	46,000.00	64.40	16,375.45	92,000.00	62,375.45
01-20-570-331	MAINTENANCE SUPPLIES	3,699.50	4,752.31	9,500.00	50.02	4,747.69	19,000.00	14,247.69
01-20-570-411	MAINTENANCE - EQUIPMENT	0.00	2,042.40	5,000.00	40.85	2,957.60	10,000.00	7,957.60
MAINTENANCE		5,268.34	62,868.73	83,436.00	75.35	20,567.27	166,872.00	104,003.27
SUMMER PROGRAM								
01-20-575-119	SUMMER PROGRAM MATERIAL	0.00	5,028.95	8,000.00	62.86	2,971.05	16,000.00	10,971.05
01-20-575-517	SENIORS PROGRAM	0.00	0.00	5,333.00	0.00	5,333.00	10,666.00	10,666.00
SUMMER PROGRAM		0.00	5,028.95	13,333.00	37.72	8,304.05	26,666.00	21,637.05
FALL PROGRAM								
01-20-580-118	FALL PROGRAM MATERIALS & S	0.00	0.00	550.00	0.00	550.00	1,100.00	1,100.00
01-20-580-517	SENIORS PROGRAM	0.00	0.00	5,333.00	0.00	5,333.00	10,666.00	10,666.00
FALL PROGRAM		0.00	0.00	5,883.00	0.00	5,883.00	11,766.00	11,766.00
WINTER/SPECIAL PROGRAMS								
01-20-585-112	RECREATION INSTRUCTORS	0.00	0.00	500.00	0.00	500.00	1,000.00	1,000.00
01-20-585-121	WINTER PROGRAM MATERIALS	0.00	0.00	2,000.00	0.00	2,000.00	4,000.00	4,000.00
01-20-585-150	CHILDRENS SPECIAL EVENTS -	441.00	441.00	2,800.00	15.75	2,359.00	5,600.00	5,159.00
01-20-585-151	FAMILY SPECIAL EVENT - MOVI	0.00	923.00	1,800.00	51.28	877.00	3,600.00	2,677.00
01-20-585-152	FAMILY SPECIAL EVENT - TREE	864.85	864.85	4,000.00	21.62	3,135.15	8,000.00	7,135.15
01-20-585-153	FAMILY SPECIAL EVENT - BACK	0.00	0.00	1,500.00	0.00	1,500.00	3,000.00	3,000.00
01-20-585-154	FAMILY SPECIAL EVENT - RACE	0.00	8,301.04	10,425.00	79.63	2,123.96	20,850.00	12,548.96
01-20-585-155	CHILDREN'S HOLIDAY PARTY	864.85	864.85	4,700.00	18.40	3,835.15	9,400.00	8,535.15
01-20-585-157	COMMUNITY PICNIC	156.25	2,655.50	3,000.00	88.52	344.50	6,000.00	3,344.50
01-20-585-517	SENIORS PROGRAM	0.00	0.00	5,333.00	0.00	5,333.00	10,666.00	10,666.00
WINTER/SPECIAL PROGRAMS		2,326.95	14,050.24	36,058.00	38.97	22,007.76	72,116.00	58,065.76
SPRING PROGRAM								
01-20-586-112	RECREATION INSTRUCTORS - S	0.00	0.00	200.00	0.00	200.00	400.00	400.00

GL NUMBER	DESCRIPTION	ACTIVITY FOR MONTH 10/31/19	YTD BALANCE 10/31/2019	2019-20 ORIGINAL BUDGET	% BDGT USED	AVAILABLE BALANCE	APPROP.	APPROP. AVAIL.
Fund 01 - GENERAL FUND								
01-20-586-121	SPRING PROGRAM MATERIALS	0.00	0.00	400.00	0.00	400.00	800.00	800.00
SPRING PROGRAM		0.00	0.00	600.00	0.00	600.00	1,200.00	1,200.00
SPECIAL RECREATION								
01-20-590-518	SPECIAL RECREATION ASSOC	0.00	19,655.43	38,540.00	51.00	18,884.57	77,080.00	57,424.57
01-20-590-519	ADA PARK MAINTENANCE	0.00	7,234.40	4,750.00	152.30	(2,484.40)	9,500.00	2,265.60
01-20-590-520	ADA RECREATION ACCOMMOD	0.00	0.00	7,700.00	0.00	7,700.00	15,400.00	15,400.00
01-20-590-521	ADA PARK IMPROVEMENTS	0.00	0.00	95,000.00	0.00	95,000.00	190,000.00	190,000.00
SPECIAL RECREATION		0.00	26,889.83	145,990.00	18.42	119,100.17	291,980.00	265,090.17
Total Dept 20 - PARKS & RECREATION		13,404.82	196,641.09	440,433.00	44.65	243,791.91	880,866.00	684,224.91
Dept 25 - FINANCE DEPARTMENT								
GENERAL MANAGEMENT								
01-25-400-147	MEDICARE	253.91	2,254.42	3,531.00	63.85	1,276.58	7,062.00	4,807.58
01-25-400-151	IMRF	1,869.70	17,443.00	23,675.00	73.68	6,232.00	47,350.00	29,907.00
01-25-400-161	SOCIAL SECURITY	1,085.69	9,639.60	14,987.00	64.32	5,347.40	29,974.00	20,334.40
01-25-400-171	SUI - UNEMPLOYMENT	11.13	131.21	248.00	52.91	116.79	496.00	364.79
01-25-610-101	SALARIES - MANAGEMENT STA	10,359.05	67,245.68	134,666.00	49.94	67,420.32	269,332.00	202,086.32
01-25-610-102	OVERTIME	0.00	321.36	1,500.00	21.42	1,178.64	3,000.00	2,678.64
01-25-610-104	PART TIME - CLERICAL	2,344.22	14,672.70	30,202.00	48.58	15,529.30	60,404.00	45,731.30
01-25-610-126	SALARIES - CLERICAL	4,615.52	73,352.35	77,127.00	95.11	3,774.65	154,254.00	80,901.65
01-25-610-141	HEALTH/DENTAL/LIFE INSURAN	1,647.97	12,566.96	37,453.00	33.55	24,886.04	74,906.00	62,339.04
01-25-610-301	OFFICE SUPPLIES	0.00	126.95	3,300.00	3.85	3,173.05	6,600.00	6,473.05
01-25-610-302	PRINTING & PUBLISHING	0.00	85.00	1,000.00	8.50	915.00	2,000.00	1,915.00
01-25-610-303	FUEL/MILEAGE/WASH	49.56	125.05	250.00	50.02	124.95	500.00	374.95
01-25-610-304	SCHOOLS/CONFERENCES/TRA	220.00	283.40	2,000.00	14.17	1,716.60	4,000.00	3,716.60
01-25-610-307	FEES/DUES/SUBSCRIPTIONS	460.00	809.90	1,415.00	57.24	605.10	2,830.00	2,020.10
01-25-610-311	POSTAGE & METER RENT	0.00	58.26	500.00	11.65	441.74	1,000.00	941.74
GENERAL MANAGEMENT		22,916.75	199,115.84	331,854.00	60.00	132,738.16	663,708.00	464,592.16
CAPITAL IMPROVEMENTS								
01-25-625-611	FURNITURE & OFFICE EQUIPME	0.00	0.00	500.00	0.00	500.00	1,000.00	1,000.00
CAPITAL IMPROVEMENTS		0.00	0.00	500.00	0.00	500.00	1,000.00	1,000.00
DATA PROCESSING								
01-25-615-212	EDP EQUIPMENT/SOFTWARE	0.00	94.25	2,400.00	3.93	2,305.75	4,800.00	4,705.75
01-25-615-263	EDP LICENSES	(3,345.00)	8,551.12	36,738.00	23.28	28,186.88	73,476.00	64,924.88
01-25-615-267	DOCUMENT STORAGE/SCANNI	0.00	0.00	2,000.00	0.00	2,000.00	4,000.00	4,000.00
01-25-615-305	EDP PERSONNEL TRAINING	0.00	0.00	2,600.00	0.00	2,600.00	5,200.00	5,200.00
01-25-615-306	IT - CONSULTING SERVICES	0.00	25,000.00	25,000.00	100.00	0.00	50,000.00	25,000.00
DATA PROCESSING		(3,345.00)	33,645.37	68,738.00	48.95	35,092.63	137,476.00	103,830.63
FINANCIAL AUDIT								
01-25-620-251	AUDIT SERVICES	21,587.00	25,587.00	28,488.00	89.82	2,901.00	56,976.00	31,389.00
01-25-620-252	FINANCIAL SERVICES	0.00	6,898.75	7,225.00	95.48	326.25	14,450.00	7,551.25

GL NUMBER	DESCRIPTION	ACTIVITY FOR MONTH 10/31/19	YTD BALANCE 10/31/2019	2019-20 ORIGINAL BUDGET	% BDGT USED	AVAILABLE BALANCE	APPROP.	APPROP. AVAIL.
Fund 01 - GENERAL FUND								
FINANCIAL AUDIT		21,587.00	32,485.75	35,713.00	90.96	3,227.25	71,426.00	38,940.25
Total Dept 25 - FINANCE DEPARTMENT		41,158.75	265,246.96	436,805.00	60.72	171,558.04	873,610.00	608,363.04
Dept 30 - POLICE DEPARTMENT								
CAPITAL IMPROVEMENTS								
01-30-680-622	RADIO EQUIPMENT	0.00	0.00	5,200.00	0.00	5,200.00	10,400.00	10,400.00
01-30-680-625	NEW VEHICLES	3,250.00	116,683.92	167,773.00	69.55	51,089.08	335,546.00	218,862.08
CAPITAL IMPROVEMENTS		3,250.00	116,683.92	172,973.00	67.46	56,289.08	345,946.00	229,262.08
ADMINISTRATION								
01-30-400-147	MEDICARE	2,838.34	18,520.91	39,257.00	47.18	20,736.09	78,514.00	59,993.09
01-30-400-151	IMRF	1,753.12	11,221.32	21,075.00	53.24	9,853.68	42,150.00	30,928.68
01-30-400-161	SOCIAL SECURITY	901.56	5,686.40	10,684.00	53.22	4,997.60	21,368.00	15,681.60
01-30-400-171	SUI - UNEMPLOYMENT	2.60	9.30	1,612.00	0.58	1,602.70	3,224.00	3,214.70
01-30-630-101	SALARIES - PERMANENT EMPL	152,888.91	1,048,744.28	2,150,593.00	48.77	1,101,848.72	4,301,186.00	3,252,441.72
01-30-630-102	OVERTIME	30,766.54	157,156.60	285,000.00	55.14	127,843.40	570,000.00	412,843.40
01-30-630-103	OVERTIME - SPECIAL DETAIL &	0.00	0.00	8,000.00	0.00	8,000.00	16,000.00	16,000.00
01-30-630-126	SALARIES - CLERICAL	13,391.68	86,579.80	163,325.00	53.01	76,745.20	326,650.00	240,070.20
01-30-630-127	OVERTIME - CLERICAL	629.71	3,316.56	9,000.00	36.85	5,683.44	18,000.00	14,683.44
01-30-630-131	PERSONNEL RECRUITMENT	0.00	0.00	2,500.00	0.00	2,500.00	5,000.00	5,000.00
01-30-630-141	HEALTH/DENTAL/LIFE INSURAN	30,463.36	175,055.87	374,763.00	46.71	199,707.13	749,526.00	574,470.13
01-30-630-155	POLICE PENSION	75,912.16	493,429.04	986,858.00	50.00	493,428.96	1,973,716.00	1,480,286.96
01-30-630-201	PHONE - TELEPHONES	1,792.21	10,746.38	27,000.00	39.80	16,253.62	54,000.00	43,253.62
01-30-630-202	ACCREDITATION	4,645.00	4,645.00	8,000.00	58.06	3,355.00	16,000.00	11,355.00
01-30-630-228	MAINTENANCE - BUILDINGS - H	471.87	3,148.98	7,180.00	43.86	4,031.02	14,360.00	11,211.02
01-30-630-235	NICOR GAS (7760 QUINCY)	122.61	701.56	3,000.00	23.39	2,298.44	6,000.00	5,298.44
01-30-630-238	FIAT	0.00	4,000.00	3,500.00	114.29	(500.00)	7,000.00	3,000.00
01-30-630-241	FEES - FIELD COURT ATTORNE	0.00	0.00	12,000.00	0.00	12,000.00	24,000.00	24,000.00
01-30-630-242	DUPAGE CHILDREN'S CENTER	0.00	3,000.00	3,000.00	100.00	0.00	6,000.00	3,000.00
01-30-630-245	FIRING RANGE	0.00	331.58	2,500.00	13.26	2,168.42	5,000.00	4,668.42
01-30-630-246	RED LIGHT - ADJUDICATOR	1,100.00	2,332.00	6,000.00	38.87	3,668.00	12,000.00	9,668.00
01-30-630-247	RED LIGHT - CAMERA FEES	0.00	44,950.00	275,000.00	16.35	230,050.00	550,000.00	505,050.00
01-30-630-248	RED LIGHT - COM ED	122.99	732.72	2,000.00	36.64	1,267.28	4,000.00	3,267.28
01-30-630-249	RED LIGHT - MISC FEE	15.00	4,726.50	22,000.00	21.48	17,273.50	44,000.00	39,273.50
01-30-630-250	SANITARY (7760 QUINCY)	0.00	339.04	400.00	84.76	60.96	800.00	460.96
01-30-630-301	OFFICE SUPPLIES	168.30	835.50	7,000.00	11.94	6,164.50	14,000.00	13,164.50
01-30-630-302	PRINTING & PUBLISHING	378.16	2,708.26	5,450.00	49.69	2,741.74	10,900.00	8,191.74
01-30-630-303	FUEL/MILEAGE/WASH	4,416.89	23,094.09	65,000.00	35.53	41,905.91	130,000.00	106,905.91
01-30-630-304	SCHOOLS/CONFERENCES/TRA	674.00	11,335.73	30,207.00	37.53	18,871.27	60,414.00	49,078.27
01-30-630-305	TUITION REIMBURSEMENT	0.00	2,250.00	6,000.00	37.50	3,750.00	12,000.00	9,750.00
01-30-630-306	REIMB PERSONNEL EXPENSES	0.00	63.63	0.00	100.00	(63.63)	0.00	(63.63)
01-30-630-307	FEES/DUES/SUBSCRIPTIONS	938.00	6,505.87	17,485.00	37.21	10,979.13	34,970.00	28,464.13
01-30-630-308	CADET PROGRAM	0.00	0.00	4,000.00	0.00	4,000.00	8,000.00	8,000.00
01-30-630-311	POSTAGE & METER RENT	35.00	1,925.27	4,000.00	48.13	2,074.73	8,000.00	6,074.73
01-30-630-315	COPY SERVICE	269.61	2,158.10	4,000.00	53.95	1,841.90	8,000.00	5,841.90
01-30-630-331	OPERATING SUPPLIES	752.45	2,922.20	3,500.00	83.49	577.80	7,000.00	4,077.80
01-30-630-345	UNIFORMS	888.43	8,583.24	33,000.00	26.01	24,416.76	66,000.00	57,416.76

GL NUMBER	DESCRIPTION	ACTIVITY FOR MONTH 10/31/19	YTD BALANCE 10/31/2019	2019-20 ORIGINAL BUDGET	% BDGT USED	AVAILABLE BALANCE	APPROP.	APPROP. AVAIL.
Fund 01 - GENERAL FUND								
01-30-630-346	AMMUNITION	0.00	0.00	13,000.00	0.00	13,000.00	26,000.00	26,000.00
01-30-630-401	OPERATING EQUIPMENT	1,594.65	10,624.88	26,900.00	39.50	16,275.12	53,800.00	43,175.12
01-30-630-402	BODY CAMERAS	0.00	0.00	33,846.00	0.00	33,846.00	67,692.00	67,692.00
01-30-630-405	FURNITURE & OFFICE EQUIPME	0.00	802.91	7,500.00	10.71	6,697.09	15,000.00	14,197.09
01-30-630-409	MAINTENANCE - VEHICLES	5,620.22	18,476.06	70,000.00	26.39	51,523.94	140,000.00	121,523.94
01-30-630-421	MAINTENANCE - RADIO EQUIPM	0.00	0.00	12,250.00	0.00	12,250.00	24,500.00	24,500.00
ADMINISTRATION		333,553.37	2,171,659.58	4,767,385.00	45.55	2,595,725.42	9,534,770.00	7,363,110.42
DATA PROCESSING								
01-30-640-212	EDP EQUIPMENT/SOFTWARE	85.90	19,754.18	22,000.00	89.79	2,245.82	44,000.00	24,245.82
01-30-640-225	INTERNET/WEBSITE HOSTING	0.00	0.00	1,968.00	0.00	1,968.00	3,936.00	3,936.00
01-30-640-263	EDP LICENSES	2,985.25	16,710.85	28,315.00	59.02	11,604.15	56,630.00	39,919.15
01-30-640-267	DOCUMENT STORAGE/SCANNI	10,352.00	10,702.00	18,000.00	59.46	7,298.00	36,000.00	25,298.00
DATA PROCESSING		13,423.15	47,167.03	70,283.00	67.11	23,115.97	140,566.00	93,398.97
RISK MANAGEMENT								
01-30-645-273	SELF INSURANCE - DEDUCTIBL	2,500.00	3,609.59	20,000.00	18.05	16,390.41	40,000.00	36,390.41
RISK MANAGEMENT		2,500.00	3,609.59	20,000.00	18.05	16,390.41	40,000.00	36,390.41
CONSTRUCTION								
01-30-635-288	BUILDING CONSTR & REMODEL	0.00	996.20	112,900.00	0.88	111,903.80	225,800.00	224,803.80
CONSTRUCTION		0.00	996.20	112,900.00	0.88	111,903.80	225,800.00	224,803.80
PATROL								
01-30-650-268	ANIMAL CONTROL	0.00	0.00	800.00	0.00	800.00	1,600.00	1,600.00
01-30-650-340	K-9 PROGRAM	160.00	160.00	1,000.00	16.00	840.00	2,000.00	1,840.00
01-30-650-343	JAIL SUPPLIES	0.00	123.02	1,500.00	8.20	1,376.98	3,000.00	2,876.98
01-30-650-348	DRUG FORFEITURE EXP - STAT	0.00	0.00	5,000.00	0.00	5,000.00	10,000.00	10,000.00
01-30-650-349	DRUG FORFEITURE EXP - FEDE	0.00	0.00	6,000.00	0.00	6,000.00	12,000.00	12,000.00
PATROL		160.00	283.02	14,300.00	1.98	14,016.98	28,600.00	28,316.98
INVESTIGATIVE								
01-30-655-339	CONFIDENTIAL FUNDS	0.00	0.00	1,000.00	0.00	1,000.00	2,000.00	2,000.00
INVESTIGATIVE		0.00	0.00	1,000.00	0.00	1,000.00	2,000.00	2,000.00
TRAFFIC SAFETY								
01-30-660-105	PART TIME - CROSSING GUARD	547.49	1,957.37	5,300.00	36.93	3,342.63	10,600.00	8,642.63
TRAFFIC SAFETY		547.49	1,957.37	5,300.00	36.93	3,342.63	10,600.00	8,642.63
ESDA COORDINATOR								
01-30-665-263	SIREN MAINTENANCE	0.00	0.00	500.00	0.00	500.00	1,000.00	1,000.00
ESDA COORDINATOR		0.00	0.00	500.00	0.00	500.00	1,000.00	1,000.00
CRIME PREVENTION								
01-30-670-302	PRINTING & PUBLISHING	0.00	0.00	1,000.00	0.00	1,000.00	2,000.00	2,000.00
01-30-670-331	COMMODITIES	2,438.42	2,571.94	5,000.00	51.44	2,428.06	10,000.00	7,428.06

GL NUMBER	DESCRIPTION	ACTIVITY FOR MONTH 10/31/19	YTD BALANCE 10/31/2019	2019-20 ORIGINAL BUDGET	% BDGT USED	AVAILABLE BALANCE	APPROP.	APPROP. AVAIL.
Fund 01 - GENERAL FUND								
CRIME PREVENTION		2,438.42	2,571.94	6,000.00	42.87	3,428.06	12,000.00	9,428.06
TELECOMMUNICATIONS								
01-30-675-235	RADIO DISPATCHING	69,081.48	207,244.44	308,058.00	67.27	100,813.56	616,116.00	408,871.56
TELECOMMUNICATIONS		69,081.48	207,244.44	308,058.00	67.27	100,813.56	616,116.00	408,871.56
Total Dept 30 - POLICE DEPARTMENT		424,953.91	2,552,173.09	5,478,699.00	46.58	2,926,525.91	10,957,398.00	8,405,224.91
Dept 35 - PUBLIC WORKS DEPARTMENT								
CAPITAL IMPROVEMENTS								
01-35-765-625	VEHICLES - NEW & OTHER	0.00	0.00	56,196.00	0.00	56,196.00	112,392.00	112,392.00
01-35-765-640	VILLAGE ENTRY SIGNS	0.00	0.00	66,667.00	0.00	66,667.00	133,334.00	133,334.00
01-35-765-685	STREET IMPROVEMENTS	1,024.25	2,525.61	85,000.00	2.97	82,474.39	170,000.00	167,474.39
CAPITAL IMPROVEMENTS		1,024.25	2,525.61	207,863.00	1.22	205,337.39	415,726.00	413,200.39
ADMINISTRATION								
01-35-400-147	MEDICARE	215.39	1,465.90	4,322.00	33.92	2,856.10	8,644.00	7,178.10
01-35-400-151	IMRF	1,830.87	12,060.39	33,766.00	35.72	21,705.61	67,532.00	55,471.61
01-35-400-161	SOCIAL SECURITY	920.86	6,196.48	17,062.00	36.32	10,865.52	34,124.00	27,927.52
01-35-400-171	SUI - UNEMPLOYMENT	0.50	25.04	186.00	13.46	160.96	372.00	346.96
01-35-710-101	SALARIES - PERMANENT EMPL	12,414.62	105,815.50	251,109.00	42.14	145,293.50	502,218.00	396,402.50
01-35-710-102	OVERTIME	581.39	2,742.37	22,500.00	12.19	19,757.63	45,000.00	42,257.63
01-35-710-103	PART TIME - LABOR	105.00	5,267.16	25,000.00	21.07	19,732.84	50,000.00	44,732.84
01-35-710-126	SALARIES - CLERICAL	1,974.46	12,814.93	25,666.00	49.93	12,851.07	51,332.00	38,517.07
01-35-710-141	HEALTH/DENTAL/LIFE INSURAN	4,737.22	26,159.89	45,538.00	57.45	19,378.11	91,076.00	64,916.11
01-35-710-201	TELEPHONES	141.77	1,324.16	2,500.00	52.97	1,175.84	5,000.00	3,675.84
01-35-710-301	OFFICE SUPPLIES	0.00	164.79	500.00	32.96	335.21	1,000.00	835.21
01-35-710-302	PRINTING & PUBLISHING	149.00	330.12	600.00	55.02	269.88	1,200.00	869.88
01-35-710-303	FUEL/MILEAGE/WASH	626.34	3,889.65	9,150.00	42.51	5,260.35	18,300.00	14,410.35
01-35-710-304	SCHOOLS/CONFERENCES/TRA	106.90	301.90	2,000.00	15.10	1,698.10	4,000.00	3,698.10
01-35-710-306	REIMB PERSONNEL EXPENSES	0.00	0.00	300.00	0.00	300.00	600.00	600.00
01-35-710-307	FEES/DUES/SUBSCRIPTIONS	0.00	0.00	310.00	0.00	310.00	620.00	620.00
01-35-710-311	POSTAGE & METER RENT	349.16	889.20	1,500.00	59.28	610.80	3,000.00	2,110.80
01-35-710-345	UNIFORMS	725.90	1,371.95	5,000.00	27.44	3,628.05	10,000.00	8,628.05
01-35-710-401	OPERATING SUPPLIES & EQUIP	0.00	3,272.77	3,500.00	93.51	227.23	7,000.00	3,727.23
01-35-710-405	FURNITURE & OFFICE EQUIPME	0.00	0.00	500.00	0.00	500.00	1,000.00	1,000.00
ADMINISTRATION		24,879.38	184,092.20	451,009.00	40.82	266,916.80	902,018.00	717,925.80
DATA PROCESSING								
01-35-715-212	EDP EQUIPMENT/SOFTWARE	0.00	509.49	3,700.00	13.77	3,190.51	7,400.00	6,890.51
01-35-715-225	INTERNET/WEBSITE HOSTING	106.85	554.25	1,370.00	40.46	815.75	2,740.00	2,185.75
DATA PROCESSING		106.85	1,063.74	5,070.00	20.98	4,006.26	10,140.00	9,076.26
ENGINEERING								
01-35-720-245	FEES - ENGINEERING	12,036.56	47,135.09	55,000.00	85.70	7,864.91	110,000.00	62,864.91
01-35-720-254	PLAN REVIEW - ENGINEER	0.00	0.00	1,500.00	0.00	1,500.00	3,000.00	3,000.00

GL NUMBER	DESCRIPTION	ACTIVITY FOR MONTH 10/31/19	YTD BALANCE 10/31/2019	2019-20 ORIGINAL BUDGET	% BDGT USED	AVAILABLE BALANCE	APPROP.	APPROP. AVAIL.
Fund 01 - GENERAL FUND								
ENGINEERING		12,036.56	47,135.09	56,500.00	83.42	9,364.91	113,000.00	65,864.91
BUILDINGS								
01-35-725-413	MAINTENANCE - GARAGE	471.88	943.75	5,000.00	18.88	4,056.25	10,000.00	9,056.25
01-35-725-414	MAINTENANCE - SALT BINS	0.00	133.00	1,500.00	8.87	1,367.00	3,000.00	2,867.00
01-35-725-415	NICOR GAS	42.68	249.11	3,000.00	8.30	2,750.89	6,000.00	5,750.89
01-35-725-417	SANITARY USER CHARGE	0.00	36.80	200.00	18.40	163.20	400.00	363.20
01-35-725-418	MAINTENANCE - PW BUILDING	1,009.36	4,550.23	10,000.00	45.50	5,449.77	20,000.00	15,449.77
BUILDINGS		1,523.92	5,912.89	19,700.00	30.01	13,787.11	39,400.00	33,487.11
EQUIPMENT REPAIR								
01-35-735-409	MAINTENANCE - VEHICLES	0.00	5,523.37	20,000.00	27.62	14,476.63	40,000.00	34,476.63
01-35-735-411	MAINTENANCE - EQUIPMENT	0.00	996.39	500.00	199.28	(496.39)	1,000.00	3.61
EQUIPMENT REPAIR		0.00	6,519.76	20,500.00	31.80	13,980.24	41,000.00	34,480.24
SNOW REMOVAL								
01-35-740-287	SNOW REMOVAL CONTRACT	0.00	0.00	60,000.00	0.00	60,000.00	120,000.00	120,000.00
01-35-740-306	REIMB PERSONAL EXPENSES	0.00	0.00	200.00	0.00	200.00	400.00	400.00
01-35-740-411	MAINTENANCE - EQUIPMENT	0.00	2,372.45	4,000.00	59.31	1,627.55	8,000.00	5,627.55
SNOW REMOVAL		0.00	2,372.45	64,200.00	3.70	61,827.55	128,400.00	126,027.55
STREET LIGHTING								
01-35-745-207	ENERGY - STREET LIGHTS	1,893.49	8,254.46	21,000.00	39.31	12,745.54	42,000.00	33,745.54
01-35-745-223	MAINTENANCE - STREET LIGHT	2,203.22	3,275.90	17,000.00	19.27	13,724.10	34,000.00	30,724.10
01-35-745-224	MAINTENANCE - TRAFFIC SIGN	0.00	0.00	4,000.00	0.00	4,000.00	8,000.00	8,000.00
STREET LIGHTING		4,096.71	11,530.36	42,000.00	27.45	30,469.64	84,000.00	72,469.64
STORM WATER IMPROVEMENTS								
01-35-750-286	JET CLEANING CULVERT	0.00	7,700.50	15,000.00	51.34	7,299.50	30,000.00	22,299.50
01-35-750-289	SITE IMPROVEMENTS	0.00	0.00	15,000.00	0.00	15,000.00	30,000.00	30,000.00
01-35-750-290	EQUIPMENT RENTAL	0.00	0.00	2,500.00	0.00	2,500.00	5,000.00	5,000.00
01-35-750-328	STREET & ROW MAINTENANCE	26,125.20	97,979.27	160,000.00	61.24	62,020.73	320,000.00	222,020.73
01-35-750-329	MAINTENANCE - SAW MILL CRE	0.00	0.00	2,000.00	0.00	2,000.00	4,000.00	4,000.00
01-35-750-338	TREE MAINTENANCE	0.00	74,393.20	85,000.00	87.52	10,606.80	170,000.00	95,606.80
01-35-750-381	STORM WATER IMPROVEMENT	5,597.60	18,524.40	50,000.00	37.05	31,475.60	100,000.00	81,475.60
STORM WATER IMPROVEMENTS		31,722.80	198,597.37	329,500.00	60.27	130,902.63	659,000.00	460,402.63
STREET MAINTENANCE								
01-35-755-279	TRASH REMOVAL	0.00	0.00	1,250.00	0.00	1,250.00	2,500.00	2,500.00
01-35-755-281	ROUTE 83 BEAUTIFICATION	0.00	21,216.10	52,500.00	40.41	31,283.90	105,000.00	83,783.90
01-35-755-282	REIMB EXP - CONSTRUCTION	0.00	0.00	500.00	0.00	500.00	1,000.00	1,000.00
01-35-755-283	REIMB EXP - OTHER	0.00	0.00	5,000.00	0.00	5,000.00	10,000.00	10,000.00
01-35-755-284	REIMB EXP - BRUSH PICKUP	15,900.00	31,800.00	20,000.00	159.00	(11,800.00)	40,000.00	8,200.00
01-35-755-290	EQUIPMENT RENTAL	0.00	0.00	750.00	0.00	750.00	1,500.00	1,500.00
01-35-755-328	STREET & ROW MAINTENANCE	0.00	1,303.88	20,000.00	6.52	18,696.12	40,000.00	38,696.12
01-35-755-331	SALT	0.00	0.00	55,000.00	0.00	55,000.00	110,000.00	110,000.00
01-35-755-332	J.U.L.I.E.	0.00	1,112.77	2,400.00	46.37	1,287.23	4,800.00	3,687.23

GL NUMBER	DESCRIPTION	ACTIVITY FOR MONTH 10/31/19	YTD BALANCE 10/31/2019	2019-20 ORIGINAL BUDGET	% BDGT USED	AVAILABLE BALANCE	APPROP.	APPROP. AVAIL.
Fund 01 - GENERAL FUND								
01-35-755-333	ROAD SIGNS	1,096.25	3,134.90	10,000.00	31.35	6,865.10	20,000.00	16,865.10
01-35-755-401	OPERATING EQUIPMENT	630.56	656.96	1,500.00	43.80	843.04	3,000.00	2,343.04
STREET MAINTENANCE		17,626.81	59,224.61	168,900.00	35.06	109,675.39	337,800.00	278,575.39
NUISANCE CONTROL								
01-35-760-258	PEST CONTROL	0.00	0.00	1,000.00	0.00	1,000.00	2,000.00	2,000.00
01-35-760-259	MOSQUITO ABATEMENT	0.00	29,780.00	35,300.00	84.36	5,520.00	70,600.00	40,820.00
NUISANCE CONTROL		0.00	29,780.00	36,300.00	82.04	6,520.00	72,600.00	42,820.00
Total Dept 35 - PUBLIC WORKS DEPARTMENT		93,017.28	548,754.08	1,401,542.00	39.15	852,787.92	2,803,084.00	2,254,329.92
Dept 40 - BUILDING & ZONING DEPARTMENT								
GENERAL MANAGEMENT								
01-40-400-147	MEDICARE	135.54	899.01	1,921.00	46.80	1,021.99	3,842.00	2,942.99
01-40-400-151	IMRF	1,172.12	7,754.35	16,200.00	47.87	8,445.65	32,400.00	24,645.65
01-40-400-161	SOCIAL SECURITY	579.50	3,843.75	8,213.00	46.80	4,369.25	16,426.00	12,582.25
01-40-400-171	SUI - UNEMPLOYMENT	0.00	0.00	93.00	0.00	93.00	186.00	186.00
01-40-810-101	SALARIES - PERMANENT EMPL	7,280.64	46,866.92	94,648.00	49.52	47,781.08	189,296.00	142,429.08
01-40-810-102	OVERTIME	548.18	5,332.55	15,000.00	35.55	9,667.45	30,000.00	24,667.45
01-40-810-126	SALARIES - CLERICAL	1,755.15	11,205.02	22,816.00	49.11	11,610.98	45,632.00	34,426.98
01-40-810-141	HEALTH/DENTAL/LIFE INSURAN	2,249.71	11,993.77	23,521.00	50.99	11,527.23	47,042.00	35,048.23
01-40-810-201	TELEPHONES	115.14	330.52	500.00	66.10	169.48	1,000.00	669.48
01-40-810-301	OFFICE SUPPLIES	24.29	127.29	1,000.00	12.73	872.71	2,000.00	1,872.71
01-40-810-302	PRINTING & PUBLISHING	244.81	1,687.19	750.00	224.96	(937.19)	1,500.00	(187.19)
01-40-810-303	FUEL/MILEAGE/WASH	61.15	342.46	1,000.00	34.25	657.54	2,000.00	1,657.54
01-40-810-304	SCHOOLS/CONFERENCES/TRA	0.00	0.00	1,000.00	0.00	1,000.00	2,000.00	2,000.00
01-40-810-307	FEES/DUES/SUBSCRIPTIONS	0.00	0.00	1,000.00	0.00	1,000.00	2,000.00	2,000.00
01-40-810-311	POSTAGE & METER RENT	0.00	90.76	350.00	25.93	259.24	700.00	609.24
01-40-810-315	COPY SERVICE	246.12	2,175.20	2,640.00	82.39	464.80	5,280.00	3,104.80
01-40-810-345	UNIFORMS	0.00	0.00	350.00	0.00	350.00	700.00	700.00
01-40-810-401	OPERATING EQUIPMENT	0.00	0.00	250.00	0.00	250.00	500.00	500.00
01-40-810-409	MAINTENANCE - VEHICLES	0.00	0.00	2,000.00	0.00	2,000.00	4,000.00	4,000.00
GENERAL MANAGEMENT		14,412.35	92,648.79	193,252.00	47.94	100,603.21	386,504.00	293,855.21
DATA PROCESSING								
01-40-815-267	DOCUMENT STORAGE/SCANNI	0.00	0.00	9,800.00	0.00	9,800.00	19,600.00	19,600.00
01-40-815-305	EDP PERSONNEL TRAINING	0.00	0.00	2,600.00	0.00	2,600.00	5,200.00	5,200.00
DATA PROCESSING		0.00	0.00	12,400.00	0.00	12,400.00	24,800.00	24,800.00
ENGINEERING								
01-40-820-245	FEES - ENGINEERING	0.00	440.00	5,000.00	8.80	4,560.00	10,000.00	9,560.00
01-40-820-246	FEES - DRAINAGE ENGINEER	0.00	803.04	10,000.00	8.03	9,196.96	20,000.00	19,196.96
01-40-820-247	REIMB EXP - ENGINEERING	0.00	0.00	500.00	0.00	500.00	1,000.00	1,000.00
01-40-820-254	PLAN REVIEW - CIVIL ENGINEE	330.00	6,708.10	5,000.00	134.16	(1,708.10)	10,000.00	3,291.90
01-40-820-255	PLAN REVIEW - STRUCTURAL	0.00	8,476.25	5,000.00	169.53	(3,476.25)	10,000.00	1,523.75
01-40-820-258	PLAN REVIEW - BUILDING CODE	15,403.72	91,927.66	90,000.00	102.14	(1,927.66)	180,000.00	88,072.34

GL NUMBER	DESCRIPTION	ACTIVITY FOR MONTH 10/31/19	YTD BALANCE 10/31/2019	2019-20 ORIGINAL BUDGET	% BDGT USED	AVAILABLE BALANCE	APPROP.	APPROP. AVAIL.
Fund 01 - GENERAL FUND								
01-40-820-259	PLAN REVIEW - DRAINAGE ENGI	260.00	2,777.08	15,000.00	18.51	12,222.92	30,000.00	27,222.92
ENGINEERING		15,993.72	111,132.13	130,500.00	85.16	19,367.87	261,000.00	149,867.87
INSPECTION								
01-40-830-109	PART TIME - INSPECTOR	4,053.00	21,441.00	40,000.00	53.60	18,559.00	80,000.00	58,559.00
01-40-830-115	PLUMBING INSPECTION	800.00	11,525.00	7,500.00	153.67	(4,025.00)	15,000.00	3,475.00
01-40-830-117	ELEVATOR INSPECTION	0.00	2,795.00	5,000.00	55.90	2,205.00	10,000.00	7,205.00
01-40-830-119	CODE ENFORCEMENT INSPECT	0.00	372.75	4,000.00	9.32	3,627.25	8,000.00	7,627.25
INSPECTION		4,853.00	36,133.75	56,500.00	63.95	20,366.25	113,000.00	76,866.25
Total Dept 40 - BUILDING & ZONING DEPARTMENT		35,259.07	239,914.67	392,652.00	61.10	152,737.33	785,304.00	545,389.33
TOTAL EXPENDITURES		759,893.61	4,698,515.50	10,549,816.00	44.54	5,851,300.50	21,099,632.00	16,401,116.50

GL NUMBER	DESCRIPTION	ACTIVITY FOR MONTH 10/31/19	YTD BALANCE 10/31/2019	2019-20 ORIGINAL BUDGET	% BDGT USED	AVAILABLE BALANCE	APPROP.	APPROP. AVAIL.
Fund 02 - WATER FUND								
Dept 50 - WATER DEPARTMENT								
CAPITAL IMPROVEMENTS								
02-50-440-626	VEHICLES - NEW & OTHER	0.00	0.00	56,196.00	0.00	56,196.00	112,392.00	112,392.00
02-50-440-694	DISTRIBUTION SYSTEM REPLA	0.00	6,415.59	10,000.00	64.16	3,584.41	20,000.00	13,584.41
CAPITAL IMPROVEMENTS		0.00	6,415.59	66,196.00	9.69	59,780.41	132,392.00	125,976.41
ADMINISTRATION								
02-50-400-147	MEDICARE	224.62	1,705.65	3,968.00	42.99	2,262.35	7,936.00	6,230.35
02-50-400-151	IMRF	1,954.71	14,308.68	32,246.00	44.37	17,937.32	64,492.00	50,183.32
02-50-400-161	SOCIAL SECURITY	960.70	7,249.48	16,967.00	42.73	9,717.52	33,934.00	26,684.52
02-50-400-171	SUI - UNEMPLOYMENT	0.62	20.11	186.00	10.81	165.89	372.00	351.89
02-50-401-101	SALARIES - PERMANENT EMPL	12,164.03	103,357.60	221,179.00	46.73	117,821.40	442,358.00	339,000.40
02-50-401-102	OVERTIME	1,844.42	23,585.87	40,000.00	58.96	16,414.13	80,000.00	56,414.13
02-50-401-103	PART TIME - LABOR	131.25	4,241.29	10,000.00	42.41	5,758.71	20,000.00	15,758.71
02-50-401-126	SALARIES - CLERICAL	1,974.34	12,814.03	25,666.00	49.93	12,851.97	51,332.00	38,517.97
02-50-401-141	HEALTH/DENTAL/LIFE INSURAN	4,810.13	26,732.34	46,620.00	57.34	19,887.66	93,240.00	66,507.66
02-50-401-201	PHONE - TELEPHONES	512.48	3,558.50	7,500.00	47.45	3,941.50	15,000.00	11,441.50
02-50-401-239	FEES - VILLAGE ATTORNEY	0.00	0.00	1,000.00	0.00	1,000.00	2,000.00	2,000.00
02-50-401-301	OFFICE SUPPLIES	0.00	0.00	750.00	0.00	750.00	1,500.00	1,500.00
02-50-401-302	PRINTING & PUBLISHING	0.00	4,849.59	4,000.00	121.24	(849.59)	8,000.00	3,150.41
02-50-401-303	FUEL/MILEAGE/WASH	626.33	3,889.63	8,500.00	45.76	4,610.37	17,000.00	13,110.37
02-50-401-304	SCHOOLS CONFERENCE TRAV	130.00	864.85	1,500.00	57.66	635.15	3,000.00	2,135.15
02-50-401-306	REIMB PERSONNEL EXPENSES	0.00	0.00	150.00	0.00	150.00	300.00	300.00
02-50-401-307	FEES DUES SUBSCRIPTIONS	19.50	179.06	600.00	29.84	420.94	1,200.00	1,020.94
02-50-401-311	POSTAGE & METER RENT	0.00	1,361.55	6,000.00	22.69	4,638.45	12,000.00	10,638.45
02-50-401-405	FURNITURE & OFFICE EQUIPME	0.00	0.00	500.00	0.00	500.00	1,000.00	1,000.00
ADMINISTRATION		25,353.13	208,718.23	427,332.00	48.84	218,613.77	854,664.00	645,945.77
OTHER								
02-50-449-102	INTEREST EXPENSE	0.00	4,703.00	9,406.00	50.00	4,703.00	18,812.00	14,109.00
02-50-449-104	BOND PRINCIPAL EXPENSE	0.00	0.00	10,800.00	0.00	10,800.00	21,600.00	21,600.00
02-50-449-105	INTEREST EXPENSE - IEPA LOA	0.00	7,534.18	14,885.00	50.62	7,350.82	29,770.00	22,235.82
02-50-449-106	PRINCIPAL EXPENSE - IEPA LO	0.00	19,689.92	39,563.00	49.77	19,873.08	79,126.00	59,436.08
OTHER		0.00	31,927.10	74,654.00	42.77	42,726.90	149,308.00	117,380.90
DATA PROCESSING								
02-50-417-212	EDP EQUIPMENT/SOFTWARE	0.00	502.98	2,800.00	17.96	2,297.02	5,600.00	5,097.02
02-50-417-263	EDP LICENSES	138.00	1,120.50	8,000.00	14.01	6,879.50	16,000.00	14,879.50
02-50-417-305	EDP PERSONNEL TRAINING	0.00	0.00	1,300.00	0.00	1,300.00	2,600.00	2,600.00
DATA PROCESSING		138.00	1,623.48	12,100.00	13.42	10,476.52	24,200.00	22,576.52
ENGINEERING								
02-50-405-245	FEES - ENGINEERING	0.00	0.00	2,500.00	0.00	2,500.00	5,000.00	5,000.00
ENGINEERING		0.00	0.00	2,500.00	0.00	2,500.00	5,000.00	5,000.00
RISK MANAGEMENT								
02-50-415-273	SELF INSURANCE - DEDUCTIBL	0.00	0.00	10,000.00	0.00	10,000.00	20,000.00	20,000.00

GL NUMBER	DESCRIPTION	ACTIVITY FOR MONTH 10/31/19	YTD BALANCE 10/31/2019	2019-20 ORIGINAL BUDGET	% BDGT USED	AVAILABLE BALANCE	APPROP.	APPROP. AVAIL.
Fund 02 - WATER FUND								
RISK MANAGEMENT		0.00	0.00	10,000.00	0.00	10,000.00	20,000.00	20,000.00
TRANSFERS TO OTHER FUNDS								
02-50-410-501	REIMBURSE OVERHEAD GENER	47,972.25	287,833.50	575,667.00	50.00	287,833.50	1,151,334.00	863,500.50
02-50-900-109	TRANSFER TO WATER CAPITAL	0.00	0.00	400,000.00	0.00	400,000.00	800,000.00	800,000.00
02-50-900-112	TRANSFER TO DEBT SERVICE -	0.00	4,685.50	47,471.00	9.87	42,785.50	94,942.00	90,256.50
TRANSFERS TO OTHER FUNDS		47,972.25	292,519.00	1,023,138.00	28.59	730,619.00	2,046,276.00	1,753,757.00
WATER PRODUCTION								
02-50-420-206	ENERGY - ELECTRIC PUMP	576.93	5,059.96	14,000.00	36.14	8,940.04	28,000.00	22,940.04
02-50-420-294	LANDSCAPING - WELLS 1 & 3	0.00	0.00	500.00	0.00	500.00	1,000.00	1,000.00
02-50-420-297	LANDSCAPING - STANDPIPE	0.00	0.00	1,000.00	0.00	1,000.00	2,000.00	2,000.00
02-50-420-361	CHEMICALS	0.00	494.33	1,500.00	32.96	1,005.67	3,000.00	2,505.67
02-50-420-362	SAMPLING ANALYSIS	125.00	575.00	5,000.00	11.50	4,425.00	10,000.00	9,425.00
02-50-420-488	MAINTENANCE - PUMPS & WELL	0.00	0.00	500.00	0.00	500.00	1,000.00	1,000.00
02-50-420-491	PUMP INSPECTION REPAIR MAI	0.00	21.94	500.00	4.39	478.06	1,000.00	978.06
02-50-420-575	PURCHASE OF WATER	138,001.99	747,100.34	1,739,500.00	42.95	992,399.66	3,479,000.00	2,731,899.66
WATER PRODUCTION		138,703.92	753,251.57	1,762,500.00	42.74	1,009,248.43	3,525,000.00	2,771,748.43
WATER STORAGE								
02-50-425-473	WELLHOUSE REPAIRS & MAINT	0.00	2,400.00	1,500.00	160.00	(900.00)	3,000.00	600.00
02-50-425-474	WELLHOUSE REPAIRS & MAIN -	0.00	803.55	1,000.00	80.36	196.45	2,000.00	1,196.45
02-50-425-475	MATERIALS & SUPPLIES- STAN	0.00	1,423.54	2,500.00	56.94	1,076.46	5,000.00	3,576.46
02-50-425-485	REPAIRS & MAINTENANCE-STA	780.00	4,642.02	5,000.00	92.84	357.98	10,000.00	5,357.98
WATER STORAGE		780.00	9,269.11	10,000.00	92.69	730.89	20,000.00	10,730.89
TRANSPORTATION/DISTRIBUTION								
02-50-430-276	LEAK SURVEYS	642.00	4,527.50	9,000.00	50.31	4,472.50	18,000.00	13,472.50
02-50-430-277	WATER DISTRIBUTION REPAIRS	14,733.43	146,963.22	150,000.00	97.98	3,036.78	300,000.00	153,036.78
02-50-430-299	LANDSCAPING - OTHER	0.00	0.00	1,500.00	0.00	1,500.00	3,000.00	3,000.00
02-50-430-401	OPERATING EQUIPMENT	0.00	3,480.45	3,000.00	116.02	(480.45)	6,000.00	2,519.55
02-50-430-425	J. U. L. I. E. MAINTENANCE & SU	0.00	0.00	500.00	0.00	500.00	1,000.00	1,000.00
02-50-430-476	MATERIAL & SUPPLIES - DISTRI	15,576.52	28,874.45	35,000.00	82.50	6,125.55	70,000.00	41,125.55
TRANSPORTATION/DISTRIBUTION		30,951.95	183,845.62	199,000.00	92.38	15,154.38	398,000.00	214,154.38
METERS & BILLING								
02-50-435-278	METERS FLOW TESTING	0.00	0.00	11,746.00	0.00	11,746.00	23,492.00	23,492.00
02-50-435-461	NEW METERING EQUIPMENT	0.00	7,283.01	15,000.00	48.55	7,716.99	30,000.00	22,716.99
02-50-435-462	METER REPLACEMENT	345.00	345.00	1,500.00	23.00	1,155.00	3,000.00	2,655.00
02-50-435-463	MAINTENANCE - METER EQUIP	0.00	0.00	2,500.00	0.00	2,500.00	5,000.00	5,000.00
METERS & BILLING		345.00	7,628.01	30,746.00	24.81	23,117.99	61,492.00	53,863.99
Total Dept 50 - WATER DEPARTMENT		244,244.25	1,495,197.71	3,618,166.00	41.32	2,122,968.29	7,236,332.00	5,741,134.29

GL NUMBER	DESCRIPTION	ACTIVITY FOR MONTH 10/31/19	YTD BALANCE 10/31/2019	2019-20 ORIGINAL BUDGET	% BDGT USED	AVAILABLE BALANCE	APPROP.	APPROP. AVAIL.
Fund 02 - WATER FUND								
TOTAL EXPENDITURES		244,244.25	1,495,197.71	3,618,166.00	41.32	2,122,968.29	7,236,332.00	5,741,134.29

GL NUMBER	DESCRIPTION	ACTIVITY FOR MONTH 10/31/19	YTD BALANCE 10/31/2019	2019-20 ORIGINAL BUDGET	% BDGT USED	AVAILABLE BALANCE	APPROP.	APPROP. AVAIL.
Fund 03 - HOTEL/MOTEL TAX FUND								
Dept 53 - HOTEL/MOTEL								
COMMUNITY RELATIONS								
03-53-435-303	WILLOWBROOK MOBILE PHONE	0.00	0.00	1,200.00	0.00	1,200.00	2,400.00	2,400.00
03-53-435-308	GRANT PILOT PROGRAM	0.00	0.00	5,000.00	0.00	5,000.00	10,000.00	10,000.00
03-53-435-316	LANDSCAPE BEAUTIFICATION	0.00	5,120.00	10,460.00	48.95	5,340.00	20,920.00	15,800.00
03-53-435-317	ADVERTISING - DCVB	0.00	0.00	25,000.00	0.00	25,000.00	50,000.00	50,000.00
03-53-435-318	ADVERTISING - VILLAGE	0.00	0.00	50,000.00	0.00	50,000.00	100,000.00	100,000.00
03-53-435-319	CHAMBER DIRECTORY	0.00	3,000.00	3,000.00	100.00	0.00	6,000.00	3,000.00
COMMUNITY RELATIONS		0.00	8,120.00	94,660.00	8.58	86,540.00	189,320.00	181,200.00
ADMINISTRATION								
03-53-401-307	FEES DUES SUBSCRIPTIONS	0.00	3,000.00	12,000.00	25.00	9,000.00	24,000.00	21,000.00
03-53-401-311	POSTAGE & METER RENT	0.00	0.00	250.00	0.00	250.00	500.00	500.00
ADMINISTRATION		0.00	3,000.00	12,250.00	24.49	9,250.00	24,500.00	21,500.00
SPECIAL EVENTS								
03-53-436-378	WINE & DINE INTELLIGENTLY	0.00	0.00	2,000.00	0.00	2,000.00	4,000.00	4,000.00
03-53-436-379	SPECIAL PROMOTIONAL EVENT	2,500.00	2,500.00	2,500.00	100.00	0.00	5,000.00	2,500.00
SPECIAL EVENTS		2,500.00	2,500.00	4,500.00	55.56	2,000.00	9,000.00	6,500.00
Total Dept 53 - HOTEL/MOTEL		2,500.00	13,620.00	111,410.00	12.23	97,790.00	222,820.00	209,200.00
TOTAL EXPENDITURES		2,500.00	13,620.00	111,410.00	12.23	97,790.00	222,820.00	209,200.00

GL NUMBER	DESCRIPTION	ACTIVITY FOR MONTH 10/31/19	YTD BALANCE 10/31/2019	2019-20 ORIGINAL BUDGET	% BDGT USED	AVAILABLE BALANCE	APPROP.	APPROP. AVAIL.
Fund 04 - MOTOR FUEL TAX FUND								
Dept 56 - MOTOR FUEL TAX								
CAPITAL IMPROVEMENTS								
04-56-430-684	STREET MAINTENANCE CONTR	0.00	199.67	265,448.00	0.08	265,248.33	530,896.00	530,696.33
CAPITAL IMPROVEMENTS		0.00	199.67	265,448.00	0.08	265,248.33	530,896.00	530,696.33
Total Dept 56 - MOTOR FUEL TAX		0.00	199.67	265,448.00	0.08	265,248.33	530,896.00	530,696.33
TOTAL EXPENDITURES		0.00	199.67	265,448.00	0.08	265,248.33	530,896.00	530,696.33

GL NUMBER	DESCRIPTION	ACTIVITY FOR MONTH 10/31/19	YTD BALANCE 10/31/2019	2019-20 ORIGINAL BUDGET	% BDGT USED	AVAILABLE BALANCE	APPROP.	APPROP. AVAIL.
Fund 06 - SSA ONE BOND & INTEREST FUND								
Dept 60 - SSA BOND								
OTHER								
06-60-550-401	BOND PRINCIPAL EXPENSE	0.00	0.00	170,000.00	0.00	170,000.00	340,000.00	340,000.00
06-60-550-402	BOND INTEREST EXPENSE	0.00	76,232.50	152,465.00	50.00	76,232.50	304,930.00	228,697.50
OTHER		0.00	76,232.50	322,465.00	23.64	246,232.50	644,930.00	568,697.50
Total Dept 60 - SSA BOND		0.00	76,232.50	322,465.00	23.64	246,232.50	644,930.00	568,697.50
TOTAL EXPENDITURES		0.00	76,232.50	322,465.00	23.64	246,232.50	644,930.00	568,697.50

GL NUMBER	DESCRIPTION	ACTIVITY FOR MONTH 10/31/19	YTD BALANCE 10/31/2019	2019-20 ORIGINAL BUDGET	% BDGT USED	AVAILABLE BALANCE	APPROP.	APPROP. AVAIL.
Fund 07 - POLICE PENSION FUND								
Dept 62								
ADMINISTRATION								
07-62-401-242	LEGAL FEES	0.00	200.00	4,000.00	5.00	3,800.00	8,000.00	7,800.00
07-62-401-251	AUDIT FEES	3,413.00	3,413.00	3,413.00	100.00	0.00	6,826.00	3,413.00
07-62-401-252	ACTUARY SERVICES	0.00	4,400.00	4,400.00	100.00	0.00	8,800.00	4,400.00
07-62-401-253	FINANCIAL ADVISORY FEES	7,254.00	14,429.00	27,500.00	52.47	13,071.00	55,000.00	40,571.00
07-62-401-254	FIDUCIARY INSURANCE	0.00	0.00	3,175.00	0.00	3,175.00	6,350.00	6,350.00
07-62-401-304	SCHOOLS CONFERENCE TRAV	1,009.08	2,549.08	4,210.00	60.55	1,660.92	8,420.00	5,870.92
07-62-401-307	FEES DUES SUBSCRIPTIONS	795.00	795.00	800.00	99.38	5.00	1,600.00	805.00
07-62-401-531	DEPT OF INSURANCE FILING FE	0.00	4,316.18	4,381.00	98.52	64.82	8,762.00	4,445.82
07-62-401-543	EXAMS - PHYSICAL	0.00	0.00	2,500.00	0.00	2,500.00	5,000.00	5,000.00
ADMINISTRATION		12,471.08	30,102.26	54,379.00	55.36	24,276.74	108,758.00	78,655.74
PENSION BENEFITS								
07-62-401-581	PENSION BENEFITS	113,449.89	663,928.71	1,289,460.00	51.49	625,531.29	2,578,920.00	1,914,991.29
07-62-401-583	NON-DUTY DISABILITY BENEFIT	5,897.52	35,385.12	71,057.00	49.80	35,671.88	142,114.00	106,728.88
07-62-401-584	DUTY DISABILITY BENEFITS	6,007.61	36,045.66	72,091.00	50.00	36,045.34	144,182.00	108,136.34
PENSION BENEFITS		125,355.02	735,359.49	1,432,608.00	51.33	697,248.51	2,865,216.00	2,129,856.51
Total Dept 62		137,826.10	765,461.75	1,486,987.00	51.48	721,525.25	2,973,974.00	2,208,512.25
TOTAL EXPENDITURES		137,826.10	765,461.75	1,486,987.00	51.48	721,525.25	2,973,974.00	2,208,512.25

GL NUMBER	DESCRIPTION	ACTIVITY FOR MONTH 10/31/19	YTD BALANCE 10/31/2019	2019-20 ORIGINAL BUDGET	% BDGT USED	AVAILABLE BALANCE	APPROP.	APPROP. AVAIL.
Fund 09 - WATER CAPITAL IMPROVEMENTS FUND								
Dept 65 - WATER CAPITAL IMPROVEMENTS								
CAPITAL IMPROVEMENTS								
09-65-440-600	WATER SYSTEM IMPROVEMEN	0.00	0.00	60,000.00	0.00	60,000.00	120,000.00	120,000.00
09-65-440-602	MTU REPLACEMENT	0.00	0.00	1,000.00	0.00	1,000.00	2,000.00	2,000.00
CAPITAL IMPROVEMENTS		0.00	0.00	61,000.00	0.00	61,000.00	122,000.00	122,000.00
Total Dept 65 - WATER CAPITAL IMPROVEMENTS		0.00	0.00	61,000.00	0.00	61,000.00	122,000.00	122,000.00
TOTAL EXPENDITURES		0.00	0.00	61,000.00	0.00	61,000.00	122,000.00	122,000.00

GL NUMBER	DESCRIPTION	ACTIVITY FOR MONTH 10/31/19	YTD BALANCE 10/31/2019	2019-20 ORIGINAL BUDGET	% BDGT USED	AVAILABLE BALANCE	APPROP.	APPROP. AVAIL.
Fund 11 - DEBT SERVICE FUND								
Dept 70 - DEBT SERVICE FUND								
OTHER								
11-70-550-401	BOND PRINCIPAL EXPENSE	0.00	0.00	214,200.00	0.00	214,200.00	428,400.00	428,400.00
11-70-550-402	BOND INTEREST EXPENSE	0.00	56,072.00	112,144.00	50.00	56,072.00	224,288.00	168,216.00
OTHER		0.00	56,072.00	326,344.00	17.18	270,272.00	652,688.00	596,616.00
Total Dept 70 - DEBT SERVICE FUND		0.00	56,072.00	326,344.00	17.18	270,272.00	652,688.00	596,616.00
TOTAL EXPENDITURES		0.00	56,072.00	326,344.00	17.18	270,272.00	652,688.00	596,616.00

GL NUMBER	DESCRIPTION	ACTIVITY FOR MONTH 10/31/19	YTD BALANCE 10/31/2019	2019-20 ORIGINAL BUDGET	% BDGT USED	AVAILABLE BALANCE	APPROP.	APPROP. AVAIL.
Fund 14 - LAND ACQUISITION, FACILITY, EXPANSION &								
Dept 75 - LAND ACQUISITION/EXPANSION/RENOVATION								
CAPITAL IMPROVEMENTS								
14-75-930-412	CRC REMODEL (825 MIDWAY D	0.00	24,769.25	120,000.00	20.64	95,230.75	240,000.00	215,230.75
CAPITAL IMPROVEMENTS		0.00	24,769.25	120,000.00	20.64	95,230.75	240,000.00	215,230.75
Total Dept 75 - LAND ACQUISITION/EXPANSION/RENOV		0.00	24,769.25	120,000.00	20.64	95,230.75	240,000.00	215,230.75
TOTAL EXPENDITURES		0.00	24,769.25	120,000.00	20.64	95,230.75	240,000.00	215,230.75

GL NUMBER	DESCRIPTION	ACTIVITY FOR MONTH 10/31/19	YTD BALANCE 10/31/2019	2019-20 ORIGINAL BUDGET	% BDGT USED	AVAILABLE BALANCE	APPROP.	APPROP. AVAIL.
Fund 15 - RT 83/PLAINFIELD RD BUSINESS DISTRCT TAX								
Dept 15 - PLANNING & ECONOMIC DEVELOPMENT								
CONTINGENCIES								
15-15-401-242	LEGAL FEES	570.90	1,340.10	10,000.00	13.40	8,659.90	20,000.00	18,659.90
15-15-510-232	CONSULTANTS-DESIGN & OTHE	0.00	0.00	2,500.00	0.00	2,500.00	5,000.00	5,000.00
CONTINGENCIES		570.90	1,340.10	12,500.00	10.72	11,159.90	25,000.00	23,659.90
ADMINISTRATION								
15-15-455-513	SALES TAX REBATE- TOWN CE	0.00	0.00	100,000.00	0.00	100,000.00	200,000.00	200,000.00
15-15-455-514	SALES TAX REBATE - PFM	0.00	0.00	170,000.00	0.00	170,000.00	340,000.00	340,000.00
ADMINISTRATION		0.00	0.00	270,000.00	0.00	270,000.00	540,000.00	540,000.00
STREET MAINTENANCE								
15-15-745-224	MAINT TRAFFIC SIGNALS	0.00	0.00	4,000.00	0.00	4,000.00	8,000.00	8,000.00
STREET MAINTENANCE		0.00	0.00	4,000.00	0.00	4,000.00	8,000.00	8,000.00
Total Dept 15 - PLANNING & ECONOMIC DEVELOPMEN		570.90	1,340.10	286,500.00	0.47	285,159.90	573,000.00	571,659.90
TOTAL EXPENDITURES		570.90	1,340.10	286,500.00	0.47	285,159.90	573,000.00	571,659.90
TOTAL EXPENDITURES - ALL FUNDS		1,145,034.86	7,131,408.48	17,148,136.00	41.59	10,016,727.52	34,296,272.00	27,164,863.52

VILLAGE OF WILLOWBROOK

BOARD MEETING
AGENDA ITEM - HISTORY/COMMENTARY

ITEM TITLE:

Receive Plan Commission Recommendation – Public Hearing Case 19-09: Consideration of a petition for text amendments to amend Sections 9-6B-1 (or 9-6B-2), 9-6C-1 (or 9-6C-2) and 9-6D-1 (or 9-6D-2) of Title 9 – Zoning Title of the Village of the Willowbrook Municipal Code to add "Video Gaming Cafe" as a new permitted or special use in the B-2, B-3 and B-4 Zoning Districts; to amend Section 9-2-2 of Title 9 – Zoning Title of the Village of the Willowbrook Municipal Code to add "Video Gaming Café" as a new definition and to amend the current definition of "Restaurant"; and to add new use categories in Sections 9-6A-1, 9-6A-2, 9-6B-1, 9-6B-2, 9-6C-1, 9-6C-2, 9-6D-1 and 9-6D-2 of Title 9 – Zoning Title of the Village of the Willowbrook Municipal Code.

AGENDA NO.
5e

AGENDA DATE:
11/11/19

STAFF REVIEW: Ann Choi, Planning Consultant SIGNATURE: Ann Choi

LEGAL REVIEW: Tom Bastian, Village Attorney SIGNATURE: Tom Bastian / mm

RECOMMENDED BY: Brian Pabst, Village Administrator SIGNATURE: Brian Pabst

REVIEWED & APPROVED BY COMMITTEE: YES ☐ NO ☐ N/A ☒

ITEM HISTORY (PREVIOUS VILLAGE BOARD REVIEWS, ACTIONS RELATED TO THIS ITEM, OTHER HISTORY)

This Village-initiated text amendment was brought about because of an increase in public inquiries by several local business owners who have expressed an interest in opening an establishment whose principal use is video gaming. The Village currently does not distinguish between video gaming cafés and restaurants that have video gaming as an ancillary use to their main business. The proposed text amendment would introduce a new "video gaming café" use that would be a standalone establishment in the Village with the service of alcohol and food as incidental to the operation of video gaming. Staff also proposed to redefine the definition of restaurant to eliminate any ambiguity from the video gaming café use. Staff also proposed the introduction of new use categories "Similar and compatible uses" to capture uses that are not explicitly enumerated in the list of permitted and special uses in the Zoning Code. The new use category would alleviate the Village from amending the Zoning Code each time the Village encounters a similar or compatible use that is not listed in the Zoning Code, and would reduce the number of text amendments (and Staff time) devoted to the text amendment process.

ITEM COMMENTARY (BACKGROUND, DISCUSSION, RECOMMENDATIONS, ETC.)

The Village's petition was discussed at the November 6, 2019 special meeting of the Plan Commission. There were no members of the public that came forward in support or opposition of the proposed text amendments. The Plan Commission's vote was unanimous in recommending approval of the proposed text amendments. The Plan Commission recommended allowing the video gaming café use as a permitted use, rather than a special use, in the B-2, B-3 and B-4 zoning districts. However, the Plan Commission did not agree with the ½ mile distance limitation between video gaming cafés and would like the Village Board to consider eliminating this restriction when it considers amendments to the Willowbrook Video Gaming Code and Liquor Code.

The Plan Commission did not express any opposition to the remaining proposed text amendments, the revised definition of restaurant and the introduction of the new use categories "Similar and compatible uses" to the list of permitted and special uses in the business zoning districts. The Plan Commission voted 7-0 in favor of the proposed text amendments, with the exception of the ½ mile distance limitation between video gaming cafés, to forward a positive recommendation to the Village Board.

ACTION PROPOSED: November 11, 2019: Receive Plan Commission Recommendation.

VILLAGE OF WILLOWBROOK
EST. 1960

Willowbrook

835 Midway Drive
Willowbrook, IL 60527-5549

Phone: (630) 323-8215 Fax: (630) 323-0787 www.willowbrookil.org

MEMORANDUM

MEMO TO: Frank A. Trilla, Mayor
Board of Trustees

MEMO FROM: Dan Kopp, Chairman, Plan Commission

DATE: November 11, 2019

SUBJECT: **Zoning Hearing Case 19-09**: Village of Willowbrook, 835 Midway Drive, Willowbrook, Illinois. Consideration of a petition for text amendments to amend Sections 9-6B-1 (or 9-6B-2), 9-6C-1 (or 9-6C-2) and 9-6D-1 (or 9-6D-2) of Title 9 – Zoning Title of the Village of the Willowbrook Municipal Code to add "Video Gaming Cafe" as a new permitted or special use in the B-2, B-3 and B-4 Zoning Districts; to amend Section 9-2-2 of Title 9 – Zoning Title of the Village of the Willowbrook Municipal Code to add "Video Gaming Café" as a new definition and to amend the current definition of "Restaurant"; and to add new use categories in Sections 9-6A-1, 9-6A-2, 9-6B-1, 9-6B-2, 9-6C-1, 9-6C-2, 9-6D-1 and 9-6D-2 of Title 9 – Zoning Title of the Village of the Willowbrook Municipal Code.

At the special meeting of the Plan Commission held on November 6, 2019, the above referenced application was discussed and the following motion was made:

MOTION: Made by Remkus and seconded by Walec that based on the submitted petition and testimony presented, I move that the Plan Commission recommend to the Village Board approval of the text amendments presented on Pages 6 and 7 of the Staff Report for PC Case Number 19-09 to define and allow "Video Gaming Café" as a permitted use in the B-2, B-3 and B-4 Zoning Districts, **with the exception that the ½ mile distance limitation between video gaming cafés be deleted,** to amend the current definition of "restaurant", and to add new use categories "Similar and compatible uses" to the list of permitted and special uses in the business zoning districts.

ROLL CALL: AYES: Chairman Kopp, Vice Chairman Wagner, Commissioners Ruffalo Kaucky, Remkus, Soukup and Walec;
NAYS: None.
ABSENT: None.

MOTION DECLARED CARRIED

Should any member of the Board have any questions regarding this matter, please do not hesitate to contact me.

DK:jp

Village of Willowbrook

Staff Report to the Village Board

Village Board: Receive:	November 11, 2019
Public Hearing Date:	November 6, 2019
Prepared By:	Ann Choi, Planning Consultant
Case Title:	PC 19-09: Consideration of a petition for text amendments to amend Sections 9-6B-1 (or 9-6B-2), 9-6C-1 (or 9-6C-2) and 9-6D-1 (or 9-6D-2) of Title 9 – Zoning Title of the Village of the Willowbrook Municipal Code to add "Video Gaming Cafe" as a new permitted or special use in the B-2, B-3 and B-4 Zoning Districts; to amend Section 9-2-2 of Title 9 – Zoning Title of the Village of the Willowbrook Municipal Code to add "Video Gaming Café" as a new definition and to amend the current definition of "Restaurant"; and to add new use categories in Sections 9-6A-1, 9-6A-2, 9-6B-1, 9-6B-2, 9-6C-1, 9-6C-2, 9-6D-1 and 9-6D-2 of Title 9 – Zoning Title of the Village of the Willowbrook Municipal Code.
Petitioner:	Village of Willowbrook, 835 Midway Drive, Willowbrook, Illinois 60527
Action Requested By Applicant:	Title 9 – Zoning Sections:

9-2-2	Definitions (Add "Video Gaming Café").
9-2-2	Definitions (Amend the current definition of "Restaurant").
9-6B-1 *(or 9-6B-2)*	Add "Video Gaming Café" to Section 9-6B-1 (as a permitted use) OR to Section 9-6B-2 (as a special use) of the Zoning Ordinance in the appropriate alphabetical location.
9-6C-1 *(or 9-6C-2)*	Add "Video Gaming Café" to Section 9-6C-1 (as a permitted use) OR to Section 9-6C-2 (as a special use) of the Zoning Ordinance in the appropriate alphabetical location.
9-6D-1 *(or 9-6D-2)*	Add "Video Gaming Café" to Section 9-6D-1 (as a permitted use) OR to Section 9-6D-2 (as a special use) of the Zoning Ordinance in the appropriate alphabetical location.
9-6A-1 **9-6B-1** **9-6C-1** **9-6D-1**	Add a new use category "Similar and compatible uses which are of the same general character as the above permitted uses. Determination of what constitutes similar and compatible shall be made by the Village Administrator or his/her authorized designee." to the list of permitted uses in the B-1, B-2, B-3 and B-4 zoning districts.
9-6A-2 **9-6B-2** **9-6C-2** **9-6D-2**	Add a new use category "Similar and compatible uses which are of the same general character as those allowed as special uses in the [corresponding zone] zoning district. Determination of what constitutes similar and compatible shall be made by the Village Administrator or his/her authorized designee." to the list of **special uses** in the B-1, B-2, B-3 and B-4 zoning districts.

Necessary Action by Village Board:	Receive Plan Commission Recommendation.

Documents Attached: **Attachment 1:** Public Hearing Notice (2 sheets)

[REMAINDER OF PAGE INTENTIONALLY LEFT BLANK]

History & Background

The Illinois Video Gaming Act was enacted on July 13, 2009, authorizing individual municipalities to pass an ordinance prohibiting video gaming within their jurisdiction. At the time, Willowbrook had an ordinance prohibiting all forms of gambling, which also prohibited video gambling. In June 2013, the Village Board was asked to reconsider this ban on video gaming by the owner of Dell Rhea's Chicken Basket on behalf of various Willowbrook restaurant owners. On July 29, 2013, the Village Board further discussed the Illinois Video Gaming Act. An ordinance was subsequently drafted that amended the Village Code to remove the current prohibition and authorize and license video gaming. When permitted by the local jurisdiction, the state law allows a current licensed establishment (i.e., a retail establishment that holds a Village liquor license allowing consumption on premises) to install up to six (6) Video Gaming Terminals (VGTs) located within an area of the establishment restricted to persons 21 years of age and older. The state would issue the video gaming licenses to establishments, and the Village would issue a local license. If a complaint was received regarding underage gambling, etc., the Village would have the authority through the Liquor Code to bring the license before the liquor commissioner for a hearing on the violation. If the violation was confirmed, the Village would then report the violation to the state. The state then has the authority to revoke their gaming license. Ordinance No. 13-O-31, permitting video gaming within a retail establishment that holds a Village liquor license, was approved by the Village Board in August 2013.

Video gaming in Willowbrook has thus currently been allowed only at establishments that have a liquor license, and these establishments' primary use is a restaurant or bar, not video gaming. The original intent of the video gaming ordinance was for existing establishments such as bars, taverns and restaurants who wanted to have video gambling to remain competitive with businesses in surrounding communities that already allowed video gaming.

On August 3, 2016, the Plan Commission reviewed a petition to allow video gaming as a special use in the B-2 zoning district concurrently with a text amendment request to allow video gaming as a principal use. The Plan Commission recommended approval on both petitions with a 6-0 unanimous roll call vote of the members present. At the time, due to the number of residents who were not in favor of this use in the community, the Village Board ultimately denied the ordinance that would allow video gaming as a principal use.

Discussion of Request

This Village-initiated text amendment was brought about because of an increase in public inquiries by several local business owners who have expressed an interest in opening an establishment whose principal use is video gaming. The Village currently does not distinguish between video gaming cafés and restaurants that have video gaming as an ancillary use to their main business. The proposed text amendment would introduce a new "video gaming café" use that would be a standalone establishment in the Village with the service of alcohol and food as incidental to the operation of video gaming. The Village found that video gaming establishments which served liquor and packaged foods such as chips could *technically* still fall under the restaurant use category because it served food. (Staff felt that the video gaming café use should be differentiated from the restaurant use, and that the definition of restaurant should be revised to be more specific.) Local and State gaming licenses would still need to be obtained, but video gaming would be the primary use of the business as opposed to a restaurant or bar.

The Village will be presenting amendments to the Willowbrook Video Gaming Code and Liquor Code tentatively at the November 11, 2019 meeting in conjunction with the above text amendments. The additional liquor license classifications will be tied to restaurants with gaming and one for video gaming cafés. The new liquor licenses will provide the Village of Willowbrook additional controls to regulate the proliferation of these types

of uses in the Village. As part of this text amendment, minimum distances (minimum of ½ mile) between video gaming cafés will also be proposed.

Under the Video Gaming Act:

1. Video gaming is restricted from the following locations:
    a. 1,000 feet of a facility operated by an organization licensee, inter-track wagering licensee, or inter-track wagering location licensee licensed under the Illinois Horse Racing Act of 1975 (230 ILCS 5/1 et seq. (West 2008)) (the Board may waive this restriction in certain circumstances);
    b. 1,000 feet of the home dock of a riverboat licensed under the Riverboat Gambling Act (230 ILCS 10/1 et seq. (West 2008)) (the Board may waive this restriction in certain circumstances); or
    c. 100 feet of either a school or a place of worship under the Religious Corporation Act (805 ILCS 110/0.01 et seq. (West 2008)).
2. Up to six (6) VGTs may be placed at each Licensed Video Gaming Location.
3. VGTs must be located in an area restricted to persons 21 years of age and over, the entrance to which is within the view of at least one employee who is at least 21 years of age. The placement of VGTs in Licensed Video Gaming Locations shall be subject to section 810 of the Video Gaming Rules. For all Locations that restrict admittance to patrons 21 years of age or older, a separate restricted area is not required. For all Locations that admit individuals under the age of 21, a physical barrier to the gaming area, including but not limited to a short partition, gate or rope shall be required. No barrier shall visually obscure the entrance to the gaming area from an employee of the Location who is over the age of 21.
4. The hours of operation of a VGT must coincide with the legal hours of operation for the consumption of alcoholic beverages on the premises.

Parking Analysis

Potential uses requesting occupancy of a new location are always evaluated as to whether adequate parking is provided on site. Although the Zoning Code does not specifically identify parking requirements for video gaming cafe's, Staff finds that the most appropriate parking requirement would be listed under "Other Business and Commercial Enterprises" in Chapter 10 of the Zoning Ordinance, which requires a lower parking ratio of 1 space per 250 square feet of floor area, as opposed to higher parking requirements for restaurants or fast-food establishment (1 space per 100 square feet of floor area). It is expected that a video gaming café will be more "restaurant" in nature but with a low patron turnover rate, where customers will come to the site, enter a "storefront, and sit down for an extended period of time. Other employees will also be available on the site. A future video gaming use(s) is anticipated to be located within a shopping center, which commands a parking requirement of 1 space per 250 square feet of floor area which is also consistent with the parking ratio required under "Other Business and Commercial Enterprises". Therefore, Staff is recommending a parking ratio of 1 parking space per 250 square feet of floor area under the "Other Business and Commercial Enterprises" in Chapter 10 of the Zoning Ordinance.

Obtaining a Valid License to Operate a Video Gaming Café

The process to open a licensed video gaming café in the Village of Willowbrook is as follows:

1. Applicant meets with Village Staff for an internal zoning review (1 day)
2. Applicant applies for Liquor License & Gaming License (varies)
3. Village Reviews application and performs background check (2 weeks)
4. Applicant meets with Liquor Commissioner or Designee (1 day)
5. Village Board consideration of Liquor License (2-4 weeks)

6. Applicant Applies for Building Permit (3-5 weeks)
7. Applicant Applies for Business License (varies)
8. Liquor License, Business License, Business License is issued with Occupancy Permit (varies)

Staff estimates it may take up to three months to obtain a valid liquor license.

Definitions of Restaurant and Video Gaming Café

The Village does not currently distinguish between video gaming cafés and restaurants that have video gaming as an ancillary use to their main business. Staff recommends that the Plan Commission consider refining the current definition of restaurant and introduce a new definition for video gaming cafés for added clarity between these two uses. The current definition of restaurant in the zoning code is as follows: "a retail establishment serving individual or group servings of food and/or drink to patrons for consumption on the premises and having a service and seating area (including bars and cocktail lounges) of at least twice the area of the food preparation area. The definition of restaurant shall not include fast food establishments as otherwise defined in this Code." A video gaming café that serves packaged foods could technically fall under this current definition of restaurant; therefore, Staff recommends that the revised definition of restaurant ensures that the cooking and preparation of foods through the use stoves, ovens, fryers and related equipment are principal functions of the restaurant use. In contrast, the service of alcohol and food would incidental to the operation of video gaming.

New Use Category - Similar and Compatible Uses

The proposed text amendments will also introduce new use categories to Sections 9-6A-1, 9-6A-2, 9-6B-1, 9-6B-2, 9-6C-1, 9-6C-2, 9-6D-1 and 9-6D-2 of Title 9 – Zoning Title that would create a catch all use category "Similar and compatible uses" for those uses that are not listed as a permitted use or special use in the business zoning districts. The determination of what constitutes "similar and compatible" shall be made by the Village Administrator or his/her authorized designee. The new use category would alleviate the Village from amending the Zoning Code each time the Village encounters a similar or compatible use that is not listed in the Zoning Code.

[REMAINDER OF PAGE INTENTIONALLY LEFT BLANK]

Proposed Amendments

1. Add the following definition to Section 9-2-2:

   "VIDEO GAMING CAFÉ:
   An establishment whose primary or major focus is video gaming and the service of alcohol and food is incidental to the operation of video gaming."

2. Delete the following definition of "Restaurant" in its entirety in Section 9-2-2 and in lieu thereof, the following language shall be substituted:

   "RESTAURANT:
   A retail establishment that is kept, used, maintained, advertised, and held out to the public as a place where meals are cooked and prepared in an adequate and sanitary kitchen located on the licensed premises using stoves, ovens, fryers, and related equipment located on the licensed premises and which are protected by a fire protection system that conforms with the Village Code. The sale of packaged food such as potato chips, pretzels, popcorn, peanuts, or other similar snacks or frozen packaged food shall not be considered food prepared and served on premises, as required herein."

3. Add "***Video Gaming Café***" to the following sections of the Zoning Ordinance in the appropriate alphabetical location:

   Section 9-6B-1 as a permitted use (or Section 9-6B-2 as a special use) in the B-2 zoning district.
   Section 9-6C-1 as a permitted use (or Section 9-6C-2 as a special use) in the B-3 zoning district.
   Section 9-6D-1 as a permitted use (or Section 9-6D-2 as a special use) in the B-4 zoning district.

4. Add the following new use category to Sections 9-6A-1, 9-6B-1, 9-6C-1, and 9-6D-1 of the Zoning Ordinance as the final use category under the list of permitted uses:

   "Similar and compatible uses which are of the same general character as the above permitted uses, as determined by the Village Administrator or his/her authorized designee."

5. Add the following new use category to Section 9-6A-2 of the Zoning Ordinance as the final use category under the list of special uses:

   "Similar and compatible uses which are of the same general character as those as allowed as special uses in the B-1 zoning district. Determination of what constitutes similar and compatible shall be made by the Village Administrator or his/her authorized designee."

6. Add the following new use category to Section 9-6B-2 of the Zoning Ordinance as the final use category under the list of special uses:

   "Similar and compatible uses which are of the same general character as those as allowed as special uses in the B-2 zoning district. Determination of what constitutes similar and compatible shall be made by the Village Administrator or his/her authorized designee."

7. Add the following new use category to Section 9-6C-2 of the Zoning Ordinance as the final use category under the list of special uses:

   "Similar and compatible uses which are of the same general character as those as allowed as special uses in the B-3 zoning district. Determination of what constitutes similar and compatible shall be made by the Village Administrator or his/her authorized designee."

8. Add the following new use category to Section 9-6D-2 of the Zoning Ordinance as the final use category under the list of special uses:

   "Similar and compatible uses which are of the same general character as those as allowed as special uses in the B-4 zoning district. Determination of what constitutes similar and compatible shall be made by the Village Administrator or his/her authorized designee."

Public Hearing and Recommendation

The Plan Commission conducted a public hearing on this petition at their November 6, 2019 meeting. The following members were in attendance: Chairman Dan Kopp, Vice Chairman Wagner, Commissioners Ruffalo, Kaucky, Soukup, Remkus and Walec. There were no members of the public that came forward with public comments.

The Plan Commission's vote was unanimous in recommending approval of the proposed text amendments. The commissioners noted that they had reviewed a similar request in regards to the video gaming use in 2016 and acknowledged that the Village Board ultimately did not agree with their 2016 recommendation to allow the video gaming café use in the Village. Chairman Kopp expressed support for the video gaming café use, and agreed with Staff's recommendation to assign the video gaming café as a permitted use. However, the Chairman did not agree with the ½ mile distance limitation between video gaming cafés since it would be protecting one business, particularly a video gaming café that was the first to open. Vice Chairman Wagner concurred.

The Plan Commission did not express any opposition to the remaining proposed text amendments, the revised definition of restaurant and the introduction of a new use category "Similar and compatible uses" to the list of permitted and special uses in the business zoning districts. The Plan Commission voted 7-0 in favor of the proposed text amendments, with the exception of the ½ mile distance limitation between video gaming cafés, to forward a positive recommendation to the Village Board.

Staff Recommendation

Staff believes the requirement of a special use within the business zoning districts would be too onerous of a process for potential applicants wishing to open up a video gaming café within the Village. The special use approval process will require notification of surrounding property owners and a public hearing before the Plan Commission which can be a minimum 60-day process at a minimum. Permitted uses, on the other hand, would allow applicants to fill out an application and be approved with a building license or permit. Video gaming cafés would further be subject to the consideration of a liquor license and approval by the Village Board.

The Plan Commission would be limited in the types of conditions it could impose on a video gaming café, as the Plan Commission does not have the authority to limit the hours of operation, the number of video gaming terminals, the number of licenses, or set license fees. These would be under the purview of the Village Board. Additionally, Staff will propose amendments to the Willowbrook Video Gaming Code and Liquor Code to regulate these establishments by introducing a liquor license tied exclusively to video gaming cafés, limiting the number of these licenses and proposing a minimum distance between video gaming cafés. Given these reasons and the fact that the State already heavily regulates these types of businesses, Staff does not recommend that the video gaming café to be assigned as a special use.

Staff also recommends approval of the new use categories "Similar and compatible uses" to capture uses that are not explicitly enumerated in the list of permitted and special uses in the Zoning Code. This will reduce the

number of text amendments (and Staff time) devoted to the text amendment process. The determination of what constitutes "similar and compatible" shall be made by the Village Administrator or his/her authorized designee. Any ambiguous use that is not contemplated by the zoning code will be further discussed between Village departments before determining if said use would require the initiation of a text amendment.

The following sample motion was provided in the staff report for the Plan Commission:

Based on the submitted petition and testimony presented, I move that the Plan Commission recommend to the Village Board approval of the text amendments presented on Pages 6 and 7 of the Staff Report for PC Case Number 19-09 to define and allow "Video Gaming Café" as a (CHOOSE "PERMITTED" OR "SPECIAL") use in the B-2, B-3 and B-4 Zoning Districts, to amend the current definition of "restaurant", and to add new use categories "Similar and compatible uses" to the list of permitted and special uses in the business zoning districts.

The following motion made by Remkus was seconded by Walec and approved on a unanimous 7-0 roll call vote of the members present:

Based on the submitted petition and testimony presented, I move that the Plan Commission recommend to the Village Board approval of the text amendments presented on Pages 6 and 7 of the Staff Report for PC Case Number 19-09 to define and allow "Video Gaming Café" as a permitted use in the B-2, B-3 and B-4 Zoning Districts, with the exception that the ½ mile distance limitation between video gaming cafés be deleted, to amend the current definition of "restaurant", and to add new use categories "Similar and compatible uses" to the list of permitted and special uses in the business zoning districts.

Attachment 1
Public Hearing Notice (2 Sheets)

NOTICE OF PUBLIC HEARING
ZONING HEARING CASE NO. 19-09

NOTICE is hereby given that the Plan Commission of the Village of Willowbrook, DuPage County, Illinois, shall conduct a public hearing at a special meeting of the Plan Commission on the 6th of November, 2019 at the hour of 7:00 P.M. in the Willowbrook Police Department Training Room, 7760 South Quincy Street, Willowbrook, IL 60527.

The purpose of this public hearing shall be to consider a petition for text amendments to amend Sections 9-6B-1 (or 9-6B-2), 9-6C-1 (or 9-6C-2) and 9-6D-1 (or 9-6D-2) of Title 9 – Zoning Title of the Village of the Willowbrook Municipal Code to add "Video Gaming Cafe" as a new permitted use or special use in the B-2, B-3 and B-4 Zoning Districts; to amend Section 9-2-2 of Title 9 – Zoning Title of the Village of the Willowbrook Municipal Code to add "Video Gaming Café" as a new definition and to amend the current definition of "Restaurant"; and to add new use categories "similar and compatible uses" in Sections 9-6A-1, 9-6A-2, 9-6B-1, 9-6B-2, 9-6C-1, 9-6C-2, 9-6D-1 and 9-6D-2 of Title 9 – Zoning Title of the Village of the Willowbrook Municipal Code.

A copy of the Village's petition is on file in the Office of the Village Planner, Village of Willowbrook, 835 Midway, Willowbrook, Illinois, and is available for public inspection.

Any individual with a disability requiring a reasonable accommodation in order to participate in any public meeting held under the authority of the Village of Willowbrook should contact Roy Giuntoli, Village of Willowbrook, 835 Midway, Willowbrook, IL 60527, or call (630) 920-2262, Monday through Friday, between 8:30 A.M. and 4:30 P.M., within a reasonable time before the meeting. Requests for sign language interpreters should be made a minimum of five working days in advance of the meeting.

All persons desiring to be heard in support or opposition to the application shall be afforded an opportunity and may submit their statements orally, in written form, or both. This hearing may be recessed to another date if not concluded on the evening scheduled.

/s/ Brian Pabst
Village Administrator

(630) 920-2261

Published in the October 21, 2019 edition of *The Chicago Sun Times* Newspaper.

Public Notices | Public Notices

ADVERTISEMENT FOR BIDS

PROJECT NAME:	Berglund Construction is requesting Bids for the following project. DEARBORN CLASSICAL ELEMENTARY SCHOOL ADDITION & RENOVATION Bid Packages #4 4.0 – Misc. Metals 4.1 – Carpentry 4.2 – Roofing 4.3 – Doors, Frames, Hardware 4.4 – Toilets 4.5 – Food Service Equipment 4.6 – Gymnasium Equipment 4.7 – Playground Equipment 4.8 – Facility Waste Compactor 4.9 – Millwork 4.10 – Fire Protection 4.11 – Plumbing 4.12 – Mechanical 4.13 – Electrical, Communications, Security 4.14 – Earthwork – Paid 4.15 – Asphalt 4.16 – Site Concrete 4.17 – Turf 4.18 – Landscaping 4.19 – Site Utilities ISSUED ON: October 17, 2019
PRE-BID CONFERENCE:	A Pre-Bid Conference will be held at 9:00 a.m. on Wednesday, October 23, 2019 at the Dearborn Classical Elementary School located at 2000 North Sacramento Avenue, Chicago, IL 60647. Meet in the lot south of the school.
SUBMISSION DUE DATE:	Bids must be delivered by 11:00 a.m. on Wednesday, November 6, 2019 to the attention of Patrick Rapleye, Berglund Construction Company – Bid Package #4. Bids must be addressed to and delivered to Public Building Commission of Chicago, PBC, Richard J. Daley Center, 50 W. Washington Street, Room 200, Chicago, IL 60602. A Public Bid Opening will be held at the PBC Board Room, on the 2nd floor, immediately following receipt of bids. Bids will also be accepted through SmartBuy by the above deadline.
CONTACT:	Mr. Patrick Rapleye, Project Management prapleye@berglundcb.com
DOCUMENT AVAILABILITY:	Please contact Patrick Rapleye via the above contact information to receive a tar-balls through SmartBuy, which will have the link to all project documents

Public Hearings | Public Hearings

NOTICE OF PUBLIC HEARING
ZONING HEARING CASE NO. 19-09

NOTICE is hereby given that the Plan Commission of the Village of Willowbrook, DuPage County, Illinois, shall conduct a public hearing at a special meeting of the Plan Commission on the 6th of November, 2019 at the hour of 7:00 P.M. in the Willowbrook Police Department Training Room, 7760 South Quincy Street, Willowbrook, IL 60527.

The purpose of this public hearing shall be to consider a petition for text amendments to amend Sections 9-8B-1 of Article 8, 9-9C-1 Var 9-9C-20 and 9-9D-2 of Title 9 of the Village of the Willowbrook Municipal Code to add Video Gaming Cafe as a new permitted use or special use in the B-2, B-3 and B-4 Zoning Districts, to amend Section 9-9A-1 of Title 9 – Zoning Title of the Village of the Willowbrook Municipal Code to add Video Gaming Cafe as a new definition and to amend the current definition of Entertainment, Indoor and new use categories, sample and compatible uses, in accordance 9-6A-1, 9-6A-2, 9-6B-1, 9-6B-2, 9-6C-1, 9-6C-2, 9-6D-1 and 9-6D-2 of Title 9 – Zoning Title of the Village of the Willowbrook Municipal Code.

A copy of the Village's petition is on file in the Office of the Village Treasurer, Village of Willowbrook, 835 Midway, Willowbrook, Illinois, and is available for public inspection.

Any individual with a disability requiring a reasonable accommodation in order to participate in any public meeting held under the authority of the Village of Willowbrook, should contact Roy Taurozzi, Village of Willowbrook, 835 Midway, Willowbrook, IL 60527, or call (630) 323-2332, Monday through Friday, between 8:30 A.M. and 4:30 P.M., with a reasonable time before the meeting. Requests for sign language interpreters should be made a minimum of five working days in advance of the meeting.

All persons desiring to file an in support or opposition to the application shall be afforded an opportunity, and may submit their comments orally, in person or by agent. This hearing may be recessed to another date without notice on the date being scheduled.

/s/ Brian Pabst
Village Administrator
(630) 323-2332

Published in the October 21, 2019 edition of The Chicago Sun Times Newspaper.
10/21/19 #1095414

Public Notices | Public Notices

IN THE CIRCUIT COURT OF FAYETTE COUNTY, WEST VIRGINIA

IN THE INTEREST OF: [illegible] Abuse and Neglect Nos.
[illegible]
J.A. [illegible]
Guardian Ad Litem: [illegible]
Judge: [illegible]

Amy [illegible]
Joey Adkins, Sr.
Tiffany Ransom

ORDER FOR PUBLICATION

[illegible]

It appearing that the whereabouts of Tiffany Ransom and Joey Adkins, Sr., are presently unknown at this time, it is Ordered that Tiffany Ransom and Joey Adkins, Sr., return from the Fayette County Circuit Clerk, Fayette County Courthouse, Fayetteville, West Virginia, the pending petition in this matter. Tiffany Ransom and Joey Adkins, Sr., are ordered and directed on or before Monday, [illegible], 2019, at 1:00 p.m., in the Courtroom of the Circuit Clerk, Fayette County Courthouse, Fayetteville, West Virginia, at which time a dispositional hearing will be held. Failure to answer and defend could result in a default judgment and loss of parental rights. Further, it is hereby Ordered that Tiffany Ransom and Joey Adkins, Sr., be advised that they may have counsel at every stage of these proceedings, are further advised that such proceedings may result in the severance of parental rights and the transfer of custody of said child unto the Petitioner. The child respondents, J.A. and J.A., shall be represented by counsel at every stage of these proceedings. The Guardian ad Litem appointed for said children is Anthony Gilpert, Jr., P.O. Box 621, Fayetteville, WV, 25840, 304-574-3111.
ENTERED by the Clerk of the Circuit Court of Fayette County this _____ day of August 2019

WILLIAM C. BURDICK
Assistant Prosecuting Attorney
CATHY L. JARRETT, CLERK
Fayette County Circuit Court
Fayette County, West Virginia

10/14, 10/21/19 #1092037

VILLAGE OF WILLOWBROOK

BOARD MEETING

AGENDA ITEM - HISTORY/COMMENTARY

ITEM TITLE:	AGENDA NO. 5f
REPORT – Annual Police Pension Board Report	AGENDA DATE: 11/11/2019

STAFF REVIEW: Carrie Dittman, Director of Finance **SIGNATURE** C. Dittman

LEGAL REVIEW: Thomas Bastian, Village Attorney **SIGNATURE:** Tom Bastian / mm

RECOMMENDED BY: Brian Pabst, Village Administrator **SIGNATURE:** Brian Pabst

REVIEWED BY COMMITTEE: YES ☐ NO ☐ N/A ☒

ITEM HISTORY (PREVIOUS VILLAGE BOARD REVIEWS, ACTIONS RELATED TO THIS ITEM, OTHER PERTINENT HISTORY)

Annually, by state statute 40 ILCS 5/3-143, the Police Pension Board is required to report to the municipality the financial condition of the pension fund at the end of its most recent fiscal year (4/30/2019). The report is used when determining the amount of taxes to levy to fund police pension benefits, although the Village has historically not levied a property tax and instead funded the police pension expenditures through General Fund sources.

At the October 30, 2019 police pension board meeting, the attached report was presented to and accepted by the pension board. The report contains excerpts from the police pension fund financial statements and actuarial valuation, which was also presented and accepted at the meeting.

The report notates the statutory minimum contribution of $720,154 or 33.33% of covered payroll, calculated in accordance with the Projected Unit Credit actuarial cost method. The actuary's recommendation is **$1,074,713** in municipal contributions (**49.74%** of covered payroll) for the 2020/2021 fiscal year, in accordance with the Entry Age Normal actuarial cost method, the accepted method under accounting standards and what the Village has historically followed for funding purposes. The actual investment return for the fiscal year ended April 30, 2019 was 6.61% and the Police Pension plan is 72.87% funded.

The current contribution for FY 2019/2020 is $986,858 or 50.57% of covered payroll.

ITEM COMMENTARY (BACKGROUND, DISCUSSION, KEY POINTS, RECOMMENDATIONS, ETC.)

The police pension board voted to approve the report at the October 30, 2019 pension board meeting and formally request **$1,074,713** as the annual municipal contribution from the Village of Willowbrook for the FY 2020/2021 police pension fund benefits and administrative costs.

The Village board will determine during the budget process what amount to contribute into the police pension fund for FY 2020/2021.

ACTION PROPOSED: ACCEPT THE REPORT

Required Reporting to the Municipality

To comply with 40 ILCS 5/3-143, each Downstate Police Pension Fund is required to prepare a report indicating various statistics of the pension fund. Various items in the report are "actuarial in nature" and, therefore, to avoid errors by the fund, we include a "draft required report" as part of the actuarial valuation package.

Items contained in this report are taken directly from the source data used to prepare the actuarial valuation and from the current and prior actuarial valuation reports prepared by our firm.

Some Pension Boards use this report as the formal request for the tax levy. PLEASE BE ADVISED THAT THIS REPORT IS NOT INTENDED TO REPLACE THE FORMAL REQUEST BY THE FUND. Particular attention should be paid to the "Employer contributions and all other sources" in item 2 and the "estimated amount required to meet the annual requirements of the fund" in item 3(b), both of which are completed based upon the calculated statutory minimum contribution as required by the statute. **These items are not based upon the recommended minimum contribution calculated by our firm and presented in the accompanying actuarial valuation report.**

We strongly suggest that a separate formal request for tax levy be submitted by the Pension Board to the municipality. Your Board attorneys should be consulted for the preparation of this formal request.

REQUIRED REPORTING TO MUNICIPALITY BY PENSION BOARD
As of 4/30/2019 fiscal year end

(40 ILCS 5/3-143) (from Ch. 108 1/2, par. 3-143)
Sec. 3-143. Report by pension board.
The pension board shall report annually to the city council or board of trustees of the municipality on the condition of the pension fund at the end of its most recently completed fiscal year. The report shall be made prior to the council or board meeting held for the levying of taxes for the year for which the report is made.

1.
Total Trust Assets (see attachment 1 for complete listing)

Total Assets (market value):	$22,711,976
Actuarial Value of Assets (see item 8 for explanation):	$23,087,641

2.
Estimated receipts during the next succeeding fiscal year from:

Participant Contributions deducted from payroll:	$205,905
Employer Contributions and all other sources:	$720,154

3.
Estimated amount required during the next succeeding fiscal year to:

(a) pay all pensions and other obligations provided in this Article:	$1,410,506
(b) meet the annual requirements of the fund as provided in Sections 3-125 and 3-127:	$926,059

4.

Total Net Income received from investment of net assets:	$1,356,181
Assumed Investment Return:	7.25%
Actual Investment Return:	6.61%
Total Net Income received from investment of net assets (FYE April 30, 2018):	$1,410,153
Assumed Investment Return (FYE April 30, 2018):	7.25%
Actual Investment Return (FYE April 30, 2018):	6.68%

5.

Total number of Active Employees that are financially contributing to the fund:	23

6.
Disbursements to:

(i) Annuitants in receipt of a regular retirement pension:	
Total number of annuitants:	15
Total amount that was disbursed in benefits:	$1,255,661
(ii) Recipients being paid a disability pension:	
Total number of annuitants:	3
Total amount that was disbursed in benefits:	$ 93,068
(iii) Survivors and children in receipt of benefits:	
Total number of annuitants:	0
Total amount that was disbursed in benefits:	$ 3,209

7.
Funded ratio of the fund: **72.87%**

8.
Unfunded Actuarial Accrued Liability: **$8,594,761**

The Unfunded Actuarial Accrued Liability is the excess of the Actuarial Accrued Liability over the Actuarial Value of Assets.

The Actuarial Accrued Liability is the portion of the present value of future plan benefits reflecting projected credited service and salaries determined by the actuarial cost method based upon the plan's actuarial assumptions and not provided for at a valuation date by the actuarial present value of future normal costs. The normal cost is the portion of this present value which is allocated to the current valuation year.

The Actuarial Value of Assets is the asset value derived by using the plan's asset valuation method which is a method designed to smooth random fluctuations in asset values. The objective underlying the use of an asset valuation method is to provide for the long-term stability of municipal contributions.

9.
Investment Policy of the pension board under the statutory investment restrictions imposed on the fund. (See attachment 2)

Certification

I, Umberto Davi, President of the Willowbrook Police Pension Board, Village of Willowbrook, DuPage County, Illinois, do hereby certify that this document is a true and correct copy of: "Required Reporting to Municipality By Pension Board" as outlined in 40 ILCS 5/3-143.

Witness my hand this 20 day of October, 2019.

Umberto Davi
President of Willowbrook Police Pension Board

Source: P.A. 95-950, eff. 8-29-08

Attachment 1

Village of Willowbrook, Illinois

Police Pension Fund

Statement of Fiduciary Net Position

April 30, 2019

Assets

Cash and cash equivalents	$ 2,509
Investments, at fair value	
Money market account	116,913
Mutual funds	13,740,760
State and local obligations	893,666
U.S. Treasury obligations	348,555
U.S. agency obligations	5,593,860
Mortgage backed securities	3,824
Corporate bonds	1,931,478
Receivables	
Accrued interest	88,794
Total assets	22,720,359

Liabilities

Due to Village	8,383

Net Position

Restricted for pensions	$ 22,711,976

Attachment 2

WILLOWBROOK POLICE PENSION FUND
INVESTMENT POLICY

PURPOSE

The investment of pension funds is the responsibility of the members of the Board of Trustees of the Willowbrook Police Pension Fund (Pension Board). The purpose of this investment policy is to:

- Indicate a conscious, formal effort by the Pension Board to develop, implement and monitor the investment of pension funds;
- Define and assign the responsibilities of all parties involved;
- Establish the relevant investment horizon for which the Pension Fund will be managed;
- Offer guidance and limitations to all Investment Managers regarding the investment of Pension Fund
- Communicate the Pension Board's policy views on management of pension funds to the public, participants, and beneficiaries of the Willowbrook Police Pension Fund (Fund);
- Establish long-term expected rates; and
- Establish a basis of evaluation investment results.

In general, the purpose of this investment policy is to outline a philosophy which will guide the investment management of the assets toward the desired results. It is intended to be sufficiently specific to be meaningful, yet flexible enough to be practical. This document is intended to serve as a reference tool, an operating code, and a communications link between the Board of Trustees, its staff, and its investment professionals.

SCOPE

This policy governs the investment practices and applies to all financial transactions of the Willowbrook Police Pension Fund (Pension Fund).

OBJECTIVES

The Pension Board has a fiduciary responsibility to discharge its duties with respect to the Pension Fund solely in the interest of the participants and beneficiaries as set forth in the Illinois Pension Code.

Safety of Principal – Preservation of principal is the foremost objective of the Pension Board. Investment transactions shall seek to first ensure that large capital losses are avoided. Additionally, the objective of the Pension Board is to avoid erosion of principal resulting from securities defaults.

Return on Investments – The Pension Board seeks to attain or exceed market rates of return on investments consistent with constraints imposed by safety objectives, cash flow considerations and Illinois Laws that restrict the placement of public funds.

Maintenance of Public Trust – All participants in the investment process shall seek to act responsibly as custodians of the Pension Fund. Investment officials shall avoid any transactions that might reasonably impair Pension Fund participant's confidence in the Pension Board's ability to manage the Pension Fund.

Liquidity – The assets shall be sufficiently liquid to meet the Pension Fund's disbursement requirements for the payment of operating expenses and benefits.

RESPONSIBILITY

Management of the investment program is the responsibility of the Pension Board. No person may engage in an investment transaction except as provided under terms of this policy established by the Pension Board.

The Treasurer of the Pension Fund shall be responsible for establishing internal controls and written procedures for the operation of the investment program. (30 ILCS 230/2.5(a)(7)).
The Pension Board will generally be responsible for the following:

- Complying with applicable laws, regulations, and rulings.
- Selecting all qualified investment professionals.

- Monitoring and evaluating investment performance and compliance with this Policy.
- Reviewing and suggesting changes, as needed, to this Policy.
- Establishing and reviewing the appropriateness of the Pension Fund's asset allocation policy.
- Taking action according to this policy.

The Pension Board may appoint an investment manager (as defined in 40 ILCS 5/1 – 101.4) to assist in the management of the investment program. The investment manager shall acknowledge, in writing, that he or she is a fiduciary with respect to the Pension Fund. Any such written acknowledgement shall be attached to this policy or included in the agreement between the Pension Board and the investment manager.

The Pension Board will meet with the investment manager quarterly to review market conditions and to determine investment strategy. This review will include analysis of the investment portfolio, its effectiveness in meeting the Pension Fund's needs for safety, liquidity, rate of return, and diversification, and its general performance.

PRUDENCE

The standard of prudence to be used by investment officials shall be the "prudent investor" and shall be applied in the context of managing the portfolio. Investments shall be made with the care, skill, prudence and diligence that a prudent person acting in like capacity and familiar with such matters would use in the conduct of an enterprise of like character with like aims.

PROHIBITED TRANSACTIONS

A Fiduciary with respect to the Pension Fund shall not:

1. Deal with the assets of the Pension Fund in his or her own interests or for his or her own account.
2. In their individual or other capacity effect any transaction involving the Pension Fund on behalf of a party whose interests are adverse to the interests of the Pension Fund or the interests of its participants or beneficiaries.
3. Receive any consideration for his or her own personal account from any party dealing with the Pension Fund in connection with a transaction involving the assets of the Pension Fund.
4. Knowingly cause or advise the Pension Fund to engage in an investment transaction when the fiduciary (i) has any direct interest in the income, gains, or profits of the investment advisor through which the investment transaction is made or (ii) has a business relationship with that investment advisor that would result in a pecuniary benefit to the fiduciary as a result of the investment transaction. (40 ILCS 5/1-110)

INVESTMENT INSTRUMENTS

The Pension Fund may invest in any type of investment instrument permitted by Illinois law, as described in Chapter 40 of the Illinois Compiled Statutes, 40 ILCS 5/1-113.2 through 113.4a. Permitted investment instruments include, but are not limited to:

1. Interest bearing direct obligations of the United States of America.
2. Interest bearing obligations to the extent that they are fully guaranteed or insured as to payment of principal and interest by the United States of America.
3. Interest bearing bonds, notes, debentures, or other similar obligations of agencies of the United States of America. For the purposes of this section, "Agencies of the United States of America" include:
    a. The Federal National Mortgage Association and the Student Loan Marketing Association.
    b. Federal Land Banks, Federal Intermediate Credit Banks, Federal Farm Credit Banks, and any other entity authorized to issue direct debt obligations of the United States of America under the Farm Credit Act of 1971.
    c. Federal Home Loan Banks and the Federal Home Loan Mortgage Corporation.

d. Any agency created by act of Congress that is authorized to issue direct debt obligations of the United States of America.

4. Corporate bonds managed through an investment advisor must meet all of the following requirements:

    a. The bonds must be rated as investment grade by one of the 2 largest rating services at the time of purchase.
    b. If subsequently downgraded below investment grade, the bonds must be liquidated by the manager from the portfolio within 90 days after being downgraded.

5. Interest bearing savings accounts or certificates of deposit, issued by federally chartered banks or savings and loan associations, or by State of Illinois chartered banks or savings and loan associations, to the extent that the deposits are insured by agencies or instrumentalities of the federal government.

6. Interest bearing bonds of the State of Illinois or interest bearing bonds or tax anticipation warrants of any county, township, or municipal corporation of the State of Illinois.

7. Pooled interest bearing accounts managed by the Illinois Public Treasurer's Investment Pool in accordance with the deposit of state moneys act.

8. Direct obligations of the State of Israel.

9. Money Market Mutual Funds managed by investment companies that are registered under the Federal Investment Company Act of 1940 and the Illinois Securities Law of 1953 and are diversified, open-ended management investment companies; provided that the portfolio of the money market mutual fund is limited to:

    a. Bonds, notes, certificates of indebtedness, treasury bills, or other securities that are guaranteed by the full faith and credit of the United States of America or its agencies.
    b. Bonds, notes, debentures, or other similar obligations of the United States of America or its agencies.

10. Not to exceed 10% of the portfolio, separate accounts that are managed by life insurance companies authorized to transact business in Illinois and are comprised of diversified portfolios consisting of common or preferred stock, bonds or money market instruments or mutual funds that meet the requirement as outlined in item 11 below.

11. In addition to the items listed above, if the Pension Fund has net assets of $2,500,000 or more it may invest a portion of its net assets in mutual funds that meet the following requirements:

    a. The mutual fund is managed by an investment company as defined and registered under the Federal Investment Company Act of 1940 and registered under the Illinois Securities Law of 1953.
    b. The mutual fund has been in operation for at least five years.
    c. The mutual fund has total net assets of $250 million or more.
    d. The mutual fund is comprised of diversified portfolios of common or preferred stocks, bonds, or money market instruments.

12. In addition to the items listed above, if the Pension Fund has net assets of $5,000,000 or more it may invest a portion of its net assets in common and preferred stocks that meet the following requirements:

    a. Investments made through an investment advisor with a written contract.
    b. Stocks of U.S. Corporations that have been in existence for 5 years.
    c. Corporations not in arrears in payment of dividends in the last 5 years.
    d. Market value of stock in any one corporation does not exceed 5% of cash and invested assets of pension fund.
    e. Stock in any one corporation does not exceed 5% of the total outstanding stock in the corporation.
    f. Stocks listed on national securities exchange or quoted in NASDAQNMS.

13. In addition to the items mentioned above, if the Pension Fund has net assets of at least $10,000,000 the fund may, through that investment adviser, invest an additional portion of its assets in common and preferred stocks and mutual funds.

If the Pension Fund has net assets of at least $2,500,000 but less than $10,000,000, the Pension Fund's investment in the above equity investments (#10, 11 and 12) shall not exceed 45% of the market value of the Pension Fund's net present assets stated in its most recent annual report on file with the Illinois Department of Insurance.

If the Pension Fund has net assets of at least $10,000,000, the Pension Fund's total investment in the above equity investments (#'s 10, 11 and 12) shall not exceed 60% effective July 1, 2011 and 65% effective July 1, 2012 of the market value of the Pension Fund's net present assets stated in its most recent annual report on file with the Illinois Department of Insurance.

The 65% maximum allocation is subject to statutory interpretation and any change to the maximum allocation will be made by motion and approval by the Board of Trustees of the Pension Fund.

Investments of the Pension Fund will be registered in the name of the Pension Fund and placed with a custodian approved by the Pension Board so long as the custodian meets the requirements of state statutes.

PERFORMANCE MEASUREMENTS

Performance will be calculated using professional standards as established by the CFA Institute. The Pension Board may include (but is not limited to) the following benchmarks for evaluating the Pension Fund's performance:

Application	Benchmark
Cash Equivalents	U.S. Treasury Bills (90 day)
Fixed Income	Barclay's U.S. Government Index
Fixed Income	Barclay's U.S. Government/Credit Index
Large Capitalization Equities	Standard & Poor's 500 Stock Index
Small Capitalization Equities	Russell 2000 Stock Index
International Equities	Morgan Stanley Capital International Europe/Australia/Far East Index

The investment performance of total portfolios, as well as asset class components, will be measured against said benchmarks. The Trustees reserve the right to terminate a manager for any reason including, but not limited to, the following:

- Investment performance which is significantly less than anticipated given the discipline employed and the risk parameters established, or unacceptable justification of poor results.
- Failure to adhere to any aspect of this statement of investment policy, including communication and reporting requirements.
- Significant qualitative changes to the investment management organization.

CONTROLS

The Pension Board maintains Pension Fund books and records in conformance with generally accepted accounting principles. Internal controls shall be reviewed by the Pension Board and may be reviewed by an independent auditor. The controls shall be designed to prevent losses of public funds arising from fraud, employee error, misrepresentation by third parties, or imprudent actions by employees and officers of the Pension Board.

DIVERSIFICATION / STRATEGY

Fixed Income

The average maturity/duration of the portfolio will be managed based upon the current existing interest rate environment. Under most circumstances the average maturity and duration of the portfolio will be maintained at approximately 5.0 years and will range from 2.0 years to 7.0 years. This type of strategy will often result in increasing the maturity/duration of the portfolio when interest rates are rising and decreasing the maturity/duration of the portfolio when interest rates are declining. The investment manager may change the duration of the portfolio as market conditions permit.

The allocation guidelines, by asset class, for the fixed income investments are as follows:

	Normal Allocation	Range of Allocation
U.S. Treasury Bills/Notes/Bonds	30%	0-100%
U.S. Government Agency Securities (non-MBS)	35%	0-70%
U.S. Government Agency Securities (Callable)	10%	0-30%
U.S. Government Agency Securities (MBS)	5%	0-10%
Taxable Municipal Securities	10%	0-20%
Certificates of Deposit	0%	0-20%
Investment Grade Corporate Bonds	10%	0-30%

Under normal market conditions the structure of the portfolio will be within these limits. However, the portfolio manager may diverge from the above guidelines due to abnormal market conditions.

Equities

Once the Pension Fund reaches the equity allocation approved by the Pension Board and permitted by law, normal asset allocation range for equity portfolio allocation weightings should be:

	Normal Allocation	Range of Allocation
U.S. Large Company Stocks	70%	40 - 100%
U.S. Small Company Stocks	20%	0 - 40%
International Stocks	10%	0 - 20%

The Pension Fund asset allocation should be rebalanced at least annually when the equity allocation rises above the maximum allowable as a percentage of assets as defined by Illinois State Statute.

LONG-TERM EXPECTED RATES (as required by GASB 67)

Annually, as of the fiscal year end date of the Pension Fund, the Investment Manager shall provide the Pension Board with Long-Term Expected Rates as required by GASB 67 at or before the next regularly scheduled pension board meeting. (The Long-Term Expected Rates as of the date of the signing of this policy are attached after the signature page. Future annual updates will be maintained in the files of the Pension Fund).

COLLATERALIZATION

It is the policy of the Pension Fund to require that all deposits in excess of FDIC insurable limits (applies to bank Certificates of Deposit and other cash deposits) be secured by collateral in order to protect deposits in the event of the bank's default. Eligible collateral instruments are U.S. Government Securities, Obligations of Federal Agencies, Obligations of the State of Illinois and/or local and municipal bonds rated "A" or better by Moody's. Collateral must be evidenced by a written agreement and held in safekeeping by a third party.

CUSTODY AND SAFEKEEPING OF INVESTMENTS

Third party safekeeping is required for all securities owned by the Pension Fund (40 ILCS 5/1-113.7). Custody arrangements shall be documented by an approved written agreement. The agreement may be in the form of a safekeeping agreement, trust agreement, escrow agreement or custody agreement.

ETHICS AND CONFLICTS OF INTEREST

Any fiduciary with respect to the Pension Fund shall refrain from personal business activity that could conflict with the proper execution of the investment program, or which could impair his or her ability to make impartial investment decisions.

REPORTING

At least quarterly, the Treasurer shall submit to the Pension Board an investment report which shall describe the portfolio in terms of investment securities, maturity, cost, transactions and earnings for the current period. The Treasurer shall also submit a comprehensive annual report on the Pension Fund and its activity.

MEETING SCHEDULE

The Pension Board shall schedule periodic meetings for the purposes of portfolio and investment manager review. Special meetings may be called from time-to-time by the Pension Board.

AUDIT

Pension Fund is subject to periodic examination by Illinois Department of Insurance-Public Pension Division.

FILING

The Board shall file a copy of this policy with the Illinois Department of Insurance, Public Pension Division within thirty (30) days of its adoption. The Board shall make a copy of this Policy available to the public at the main administrative office of the Pension Fund. (40 ILCS 5/1-113.6; 30 ILCS 235/2.5(c))

INDEMNIFICATION

The Pension Fund may indemnify and protect the trustees, staff and advisors against all damage claims and suits, including defense thereof, when damages are sought for negligent or wrongful acts alleged to have been committed in the scope of employment or under the direction of the trustees. However, the trustees, staff and advisors shall not be indemnified for willful misconduct and gross negligence.

DEFINITIONS

Beneficiary – person eligible for or receiving benefits from a pension fund.

Book Entry Security – securities that can be transferred from institution to institution using the federal electronic wire system, thus eliminating the physical transfer of certificates. Records are maintained on a computer system at the Federal Reserve.

Collateral – the pledging of a security to guarantee performance of an obligation.

Fiduciary – person entrusted with the control of assets for the benefit of others.

Investment Manager – an individual or organization that provides investment management services for a fee, either on a discretionary or nondiscretionary basis. Under Illinois law, an investment manager is considered a fiduciary with respect to the Pension Fund.

Market Value – the present price of a given security.

Barclay's Capital Government Bond Index - The Barclay's Capital Government Bond Index tracks the performance of the combined U.S. Treasury and U.S. Agency markets. It includes U.S. dollar-denominated U.S. Treasury and U.S. Agency Bonds, issued in the U.S. domestic bond market.

Morgan Stanley Capital International (EAFE) – Indices are based on the share prices of approximately 1,600 companies listed on stock exchanges in the twenty-two countries that make up the MSCI National Indices.

Return – the profit or interest as payment for investment.

Russell 2000 Stock Index – is comprised of the smallest 2000 companies in the Russell 3000 index, representing approximately 11% of the Russell 3000 total market capitalization. The Index was developed with a base value of 135.00 as of December 31, 1986.

Security – any note, stock, bond, certificate of interest or certificate of deposit.

Separate Account – term used of variable annuities. Because the risk is borne by the investor in a variable annuity, the issuer may not commingle funds invested in the variable annuity with the general funds of the issuer.

Standard & Poor's 500 Stock Index – is a capitalization-weighted index of 500 stocks designed to measure performance of the broad domestic economy through changes in the aggregate market value of 500 stocks representing all major industries. The index was developed with a base level of 10 for the 1941-43 base period.

Treasury Bill – short-term debt obligation of U.S. government which will mature in one year or less at the time of original issuance.

Treasury Note – debt obligations of U.S. government which will mature in ten years or less at the time of original issuance.

Treasury Bond – longer debt obligations of U.S. government which will mature in ten years or longer at the time of original issuance.

Current Yield – percentage derived by taking annual interest from an investment and dividing by current market value.

AMENDMENT

This policy may be amended from time to time by the Pension Board.

CONFLICT

In the event of any conflict between this Policy and the Illinois Compiled Statutes or case decisions of the State of Illinois, the Statutes and case law decisions shall govern.

ADOPTION

This Investment Policy is hereby adopted by the Willowbrook Police Pension Fund Board of Trustees on this the 18th day of July, 2018.

Title	Signature
President	
Secretary	
Treasurer	Carrie Otto
Trustee	
Trustee	
Trustee	

7/2018 – Custom for Willowbrook Police Pension Fund

LONG-TERM EXPECTED RATES (as required by GASB 67)

Target	Asset Class	Long-Term Expected Nominal Rate of Return	Inflation + Expenses	Long-Term Expected Real Rate of Return
42.0%	Large Cap Domestic Equity	9.3%	2.7%	6.7%
12.0%	Small Cap Domestic Equity	11.1%	2.7%	8.5%
6.0%	International Equity	9.1%	2.7%	6.5%
40.0%	Fixed Income	4.3%	2.7%	1.7%
100.0%	Long-Term Weighted Average Expected Return	7.5%		4.9%

Pension Fund: **Willowbrook Police Pension Fund**
Fiscal Year End: **April 30, 2019**

Notes:

Past performance does not guarantee future investment returns. The Long-Term Expected Real Rate of Returns are net of inflation and investment expense. Long-term returns for the asset classes are calculated on a geometric mean basis.

Asset class returns and risk premium data are from Morningstar Analyst Research Center - SBBI Data for the period of 12/31/1925 through 12/31/2018. International Equity = the MSCI EAFE Index 12/31/1969 through 12/31/2018.

VILLAGE OF WILLOWBROOK

BOARD MEETING
AGENDA ITEM - HISTORY/COMMENTARY

RECEIVE CONCEPT DESIGNS FOR THE VILLAGE OF WILLOWBROOK COMMUNITY RESOURCE CENTER / VILLAGE BOARD ROOM AT 825 MIDWAY DRIVE BY N. BATISTICH ARCHITECTS

AGENDA NO. 6

AGENDA DATE: 11/11/19

STAFF REVIEW: Mike Mertens, Assistant Village Administrator SIGNATURE: M. Mertens

LEGAL REVIEW: Tom Bastian, Village Attorney SIGNATURE: Tom Bastian / mm

RECOMMENDED BY: Brian Pabst, Village Administrator SIGNATURE: Brian Pabst

REVIEWED & APPROVED BY COMMITTEE: YES ☐ NO ☐ N/A ☒

ITEM HISTORY (PREVIOUS VILLAGE BOARD REVIEWS, ACTIONS RELATED TO THIS ITEM, OTHER HISTORY)

On May 28, 2019, the Village entered into a professional service agreement with N. Batistich Architects for the interior design services for the Village of Willowbrook Community Resource Center / Village Board Room located at 825 Midway Drive. The program services include the following items:

- Prepare architectural working plans with specifications,
- Provide all structural design,
- Provide plumbing, electrical and HVAC design,
- Review all shop drawings,
- Provide on-site inspections during constructions to assure compliance with Architect's Documents,
- Provide final inspection and punch list.

Items not provided by this scope of service is furniture, fixtures and equipment, design and specification of the Village Board dais, and the audio / visual / internet related items that may be desired by the Village Board.

STAFF RECOMMENDATION

The concept plans highlight two options for a Village exterior, with and without a canopy/sign pylon, as well as two internal concept layouts. Nick Batistich will present the concept layouts and provide room utilization details, sound proofing, lighting, storage, HVAC and items that will need to be considered by other outside consultants.

Upon feedback from the presentation, the program calls for final design services and cost estimates to be complete in 2019 with the ability to bid the project in the first quarter 2020.

ACTION PROPOSED: Adopt Ordinance.

PHASE II - INTERIOR BUILD OUT:

VILLAGE OF WILLOWBROOK
BOARD AND COMMUNITY CENTER

825 MIDWAY DRIVE, WILLOWBROOK, IL

VIEW FROM WEST WITH NEW ENTRY CANOPY / MONUMENT WALL

EXISTING VIEW FROM WEST

n. batistich, architects
MEADOWBROOK OFFICE CENTER
16W435 S. FRONTAGE RD., SUITE 201
BURR RIDGE, IL 60527 (630) 986-1773

I HEREBY CERTIFY THAT THESE PLANS WERE PREPARED BY ME OR UNDER MY DIRECT SUPERVISION AND TO THE BEST OF MY KNOWLEDGE AND BELIEF MEET THE REQUIREMENTS OF THE APPLICABLE BUILDING CODES

DO NOT SCALE DRAWINGS

CONTRACTOR SHALL VERIFY ALL PLAN DIMENSIONS ON CONSTRUCTION SITE AND REPORT ANY DISCREPANCY TO THE ARCHITECT, OR WARRANT, OF ANY DIMENSIONS NOT VERIFIED ON CONSTRUCTION SITE THERE OR BE RESPONSIBLE FOR SAME.

PLAN No.	.
SHEET No.	PRELIMINARY ELEVATIONS
DATE ISSUED	Oct. 28, 2019
DWG.	April 4, 2019
Issued to:	
FILE	
APPROVED BY:	

PHASE II - INTERIOR BUILD OUT:

VILLAGE OF WILLOWBROOK
BOARD AND COMMUNITY CENTER

825 MIDWAY DRIVE, WILLOWBROOK, IL

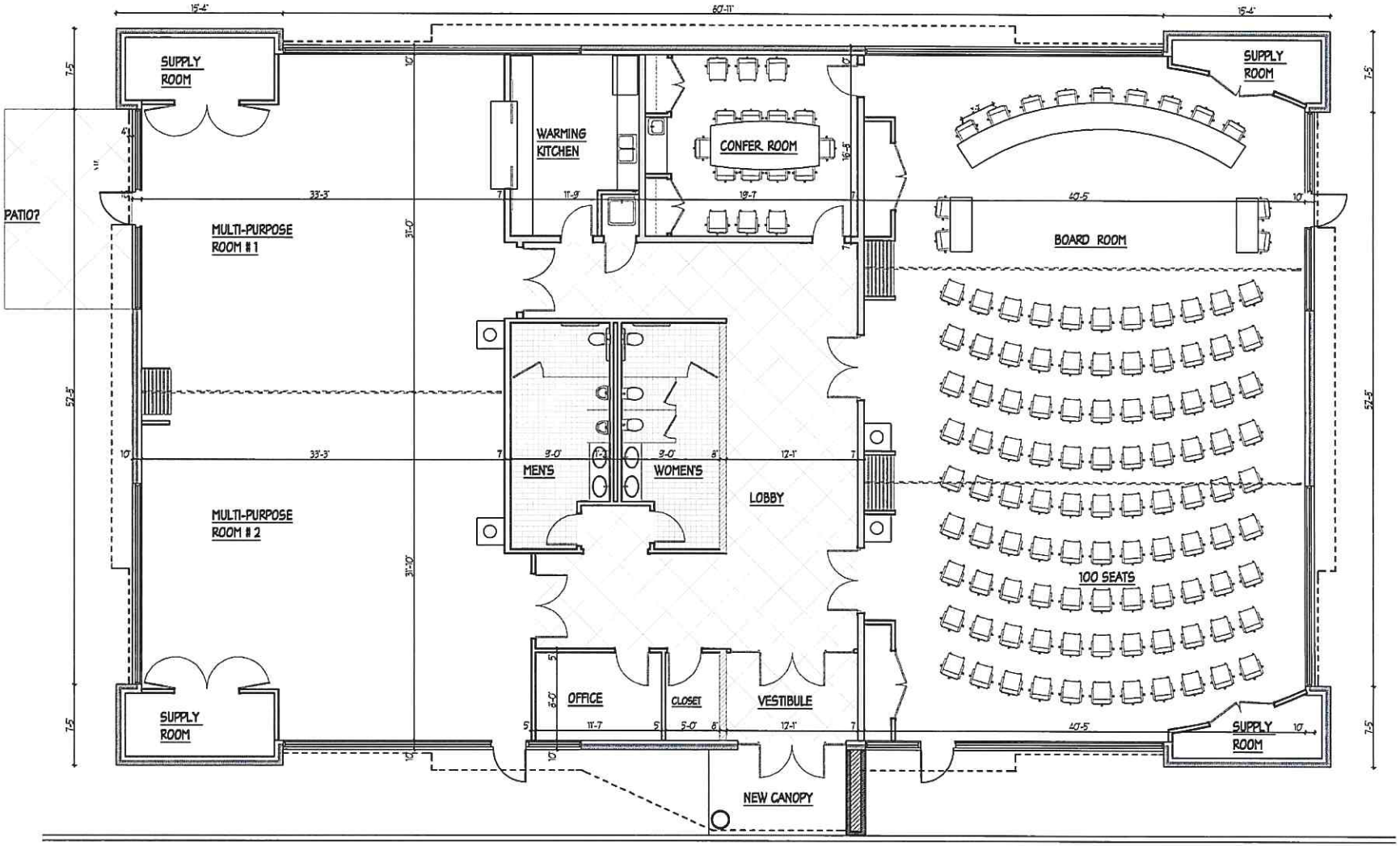

FLOOR PLAN "A"

SCALE 1/4"=1'-0"

N

n. batistich, architects

MACOMBROOK OFFICE CENTER

16W475 S. FRONTAGE RD., SUITE 201

BURR RIDGE, IL 60527 (630) 986-1773

I HEREBY CERTIFY THAT THESE PLANS WERE PREPARED BY ME OR UNDER MY DIRECT SUPERVISION AND TO THE BEST OF MY KNOWLEDGE AND BELIEF WITH THE REQUIREMENTS OF THE APPLICABLE BUILDING CODES

DO NOT SCALE DRAWINGS

CONTRACTOR SHALL VERIFY ALL PLAN AND DIMENSIONS AND LOCATIONS OF ALL EXISTING CONDITIONS PRIOR TO THE ARCHITECT'S, OR NOTIFY THE ARCHITECT OF ANY DISCREPANCY WITH THEM OR BE RESPONSIBLE FOR SAME.

REVISIONS	DATE	DRAWN BY:	CHECKED BY:
Oct 28, 2019	Sept. 6, 2019		

PLAN No. -

SHEET No. PRELIMINARY "A"

PHASE II - INTERIOR BUILD OUT:

VILLAGE OF WILLOWBROOK
BOARD AND COMMUNITY CENTER
825 MIDWAY DRIVE, WILLOWBROOK, IL

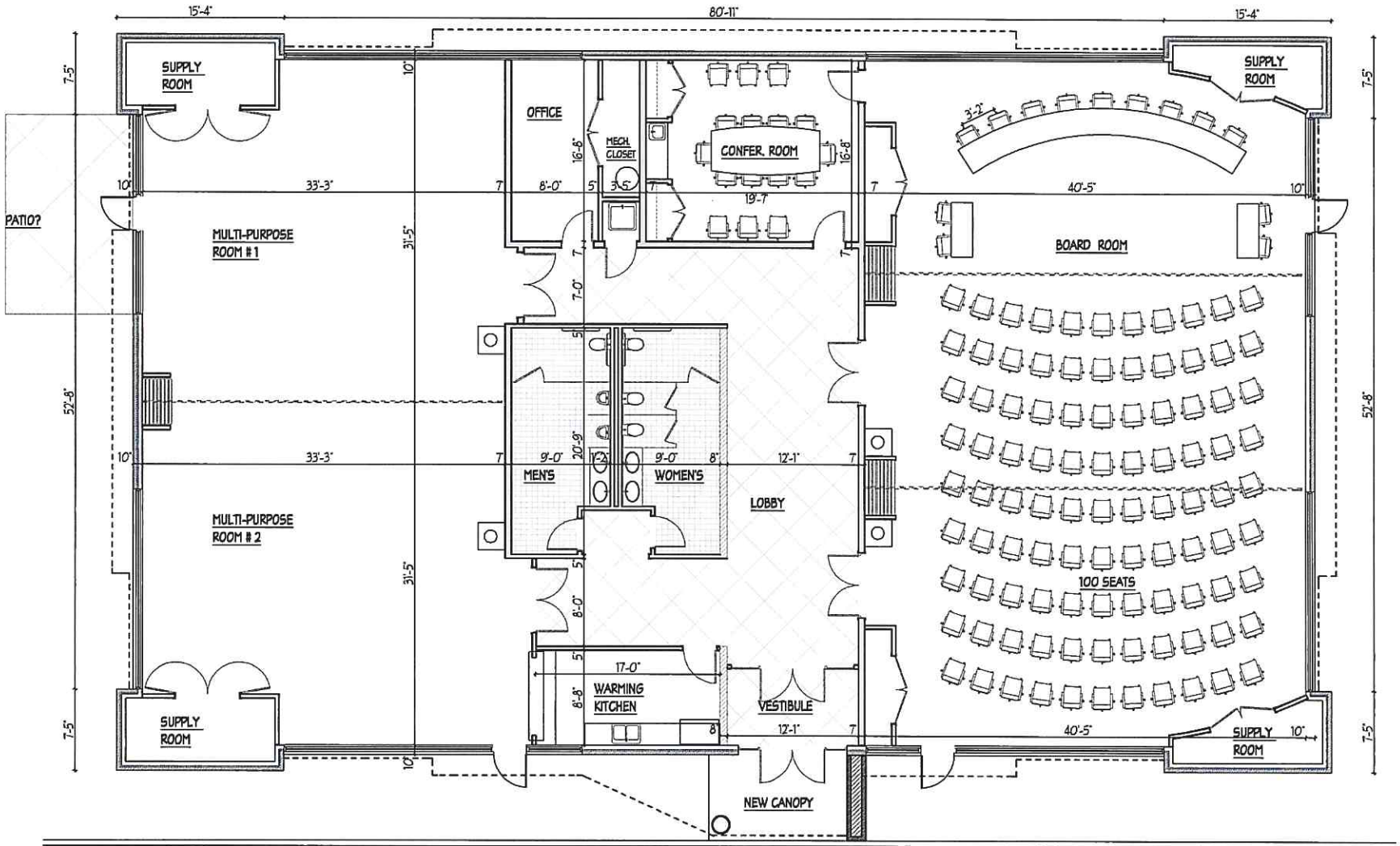

FLOOR PLAN "B"
SCALE 1/4"=1'-0"

N

n. batistich, architects
MEADOWBROOK OFFICE CENTER
16W415 S. FRONTAGE RD., SUITE 201
BURR RIDGE, IL 60527 (630) 986-1773

I HEREBY CERTIFY THAT THESE PLANS WERE PREPARED BY ME OR UNDER MY DIRECT SUPERVISION AND TO THE BEST OF MY KNOWLEDGE AND BELIEF WERE THE RECOMMENDATIONS OF THE APPLICABLE BUILDING CODES.

DO NOT SCALE DRAWINGS

CONTRACTOR SHALL VERIFY ALL PLAN DIMENSIONS AND CONDITIONS ON THE JOB BEFORE PROCEEDING WITH THE WORK. THE ARCHITECT, IN WRITING, OF ANY DISCREPANCIES OR CONFLICTS MUST BE NOTED. WITH WORK OR BE RESPONSIBLE FOR SAME.

REVISIONS	DATE
	Oct. 28, 2013

DATE: Sept. 6, 2013
DRAWN BY:
SCALE:
APPROVED BY:

PLAN No.:
SHEET No.: PRELIMINARY "B"

VILLAGE OF WILLOWBROOK

BOARD MEETING
AGENDA ITEM - HISTORY/COMMENTARY

AN ORDINANCE AMENDING SECTION 3-12-5 ENTITLED "CLASSIFICATIONS," OF CHAPTER 12 ENTITLED "LIQUOR," OF TITLE 3 ENTITLED "BUSINESS" OF THE VILLAGE CODE OF ORDINANCES OF THE VILLAGE OF WILLOWBROOK, DUPAGE COUNTY, ILLINOIS

AGENDA NO. 7

AGENDA DATE: 11/11/19

STAFF REVIEW: Mike Mertens, Assistant Village Administrator SIGNATURE: M. Mertens

LEGAL REVIEW: Tom Bastian, Village Attorney SIGNATURE: Tom Bastian /mm

RECOMMENDED BY: Brian Pabst, Village Administrator SIGNATURE: Brian Pabst

REVIEWED & APPROVED BY COMMITTEE: YES ☐ NO ☐ N/A ☒

ITEM HISTORY (PREVIOUS VILLAGE BOARD REVIEWS, ACTIONS RELATED TO THIS ITEM, OTHER HISTORY)

The Village of Willowbrook has the corporate authority, through the Illinois Liquor Control Act, to regulate the number, classification and license fee authorizing the retail sale of alcoholic liquor within the Village. It is in the best interest of the Village to amend Section 3-12-5 to provide that the number of liquor licenses available in the Village equal the number of liquor licenses in use.

The attached ordinance would amend Section 3-12-5 to add in Section 3-12-5-1 "Reduction of Licenses" to read as follows:

Whenever a license previously issued under the provisions of this chapter is revoked, surrendered, or terminated by dormancy as herein provided, the maximum number of local liquor licenses in that license class shall automatically and immediately be reduced by one. Thereafter, the number of reduced local liquor licenses for that class shall not thereafter be increased without approval by a majority vote of the Mayor and Board of Trustees.

The Kerry Piper has officially closed and this ordinance will automatically reduce the number of liquor licenses available in that category by one license with this closing.

STAFF RECOMMENDATION

Staff recommends that the Village consider this ordinance amendment as presented. This amendment will provide the Village with the desired control to regulate liquor licenses in the best interest of the Village.

ACTION PROPOSED: Adopt Ordinance.

ORDINANCE NO. 19-0-_____

AN ORDINANCE AMENDING SECTION 3-12-5 ENTITLED "CLASSIFICATIONS," OF CHAPTER 12 ENTITLED "LIQUOR," OF TITLE 3 ENTITLED "BUSINESS" OF THE VILLAGE CODE OF ORDINANCES OF THE VILLAGE OF WILLOWBROOK, DUPAGE COUNTY, ILLINOIS

WHEREAS, the corporate authorities of the Village of Willowbrook, are expressly authorized, pursuant to Section 4-1 of the Illinois Liquor Control Act (235 ILCS 5/4-1), to regulate the number, classification and license fees authorizing the retail sale of alcoholic liquor in the Village; and

WHEREAS, the corporate authorities of the Village of Willowbrook, have determined that it is proper and in the best interest of the Village to amend Section 3-12-5 to provide that the number of liquor licenses available in the Village equal the number of liquor licenses in use.

NOW, THEREFORE, BE IT ORDAINED by the Mayor and Board of Trustees of the Village of Willowbrook, DuPage County, Illinois as follows:

SECTION ONE: Section 3-12-5 entitled: "Classifications," of Chapter 12 entitled "Liquor," of Title 3 entitled "Business" of the Village Code of Ordinances of the Village of Willowbrook, DuPage County, Illinois, as amended, is further amended by adding thereto, Section 3-12-5-1 entitled "Reduction of Licenses", to read as follows:

> **"3-12-5-1: Reduction of Licenses.**
>
> Whenever a license previously issued under the provisions of this chapter is revoked, surrendered, or terminated by dormancy as herein provided, the maximum number of local liquor licenses in that license class shall automatically and immediately be reduced by one. Thereafter, the number of reduced local liquor licenses for that class shall not thereafter be increased without approval by a majority vote of the President and Board of Trustees."

SECTION TWO: Any ordinance or portion of any ordinance in conflict with the provisions of this Ordinance is hereby repealed solely to the extent of said conflict.

SECTION THREE: That this Ordinance shall be in full force and effect from and after its passage, approval, and publication in pamphlet form as provided by law.

PASSED and APPROVED this 11th day of November, 2019.

APPROVED:

_____
Frank A. Trilla, Mayor

ATTEST:

_____
Leroy R. Hansen,
Village Clerk

ROLL CALL VOTE: AYES: _____

NAYS: _____

ABSTENTIONS: _____

ABSENT: _____

VILLAGE OF WILLOWBROOK

BOARD MEETING
AGENDA ITEM - HISTORY/COMMENTARY

A RESOLUTION APPROVING AND AUTHORIZING THE MAYOR AND VILLAGE CLERK TO EXECUTE AN AGREEMENT WITH N.J. RYAN TREE & LANDSCAPING, LLC TO PROVIDE SNOW REMOVAL AND SALTING SERVICES FOR THE 2019/2020 WINTER SEASON IN THE VILLAGE OF WILLOWBROOK

AGENDA NO. 8

AGENDA DATE: 11/11/19

STAFF REVIEW: Joe Coons, Superintendent of Public Works SIGNATURE: J. Coons / mm

LEGAL REVIEW: Tom Bastian, Village Attorney SIGNATURE: T. Bastian / mm

RECOMMENDED BY: Brian Pabst, Village Administrator SIGNATURE: B. Pabst / mm

REVIEWED & APPROVED BY COMMITTEE: YES ☒ NO ☐ N/A ☐

ITEM HISTORY (PREVIOUS VILLAGE BOARD REVIEWS, ACTIONS RELATED TO THIS ITEM, OTHER HISTORY)

The Village is looking to hire a contractor to help with 2019/20 snow season. The Village has always had a contractor to help with the removal of snow due to the limited staff size of four (4). The Village has solicited contractors for pricing for snow removal service for the 2019/20 snow season. The following is a summary of equipment and prices from three (3) different vendors.

NJ Ryan	H&R Construction	Falco's Landscaping
Pickup truck with plow $115 per hour	Pickup truck with plow $125 per hour	Pickup truck with plow $120 per hour
Bobcat with pusher box $140 per hour	Case with pusher box $155 per hour	Bobcat with pusher box $140 per hour
6-wheel dump truck $85 per hour	Mack dump truck $125 per hour	1-ton dump truck $120 per hour
Combo Loader $160 per hour	CAT loader $155 per hour	Bobcat loader $140 per hour
Dump truck with salt spreader $145 per hour	H&R does not have equipment to spread salt	1-ton pickup with salt box $140 per hour
Laborer $75 per hour	Laborer $82.50 per hour	Laborer $75 per hour
Staffing up to 10	Staffing up to 6	Staffing up to 5

The equipment listed above is comparable even though the type of equipment has similar functionality. The price per vehicle includes a driver. The separate laborer charge is utilized if the Village requires hand work such as snow removal on sidewalks at public buildings. This is something that occasionally happens if the public works staff is on the streets doing the plow routes and time does not allow them to get to the public buildings to shovel the sidewalks. It is at the discretion of the public works staff as to when to call out the contactor. On smaller events, the public works staff may be able to handle the snow removal in-house. The Village has budgeted $60,000 for the snow removal contract for the past three (3) years. The Village spent $73,300 in FY 2017/18 and $66,263 in FY 2018/19. Attached are the complete price listings from the three (3) contractors.

STAFF RECOMMENDATION

The Village has been using H&R Construction to do our snow removal for 25 plus years. They have been very reliable and have always been timely in their practices. One limitation with H&R Construction is that they do not have the equipment to spread salt. This requires our public works staff to go back over that area that H& R Construction recently plowed and salt the streets. This type of work causes a duplication of man hours, extra wear on Village vehicles and strains our limited staff during heavy snow events. The Village would supply salt to the contractor to use in town with the understanding that whatever salt is not used be returned to the public works facility before the contractor leaves town. The Village requires the contractor to be on-site within one (1) hour of a call-in for snow removal service. The Village would require that snow removal equipment be stored in Willowbrook or in a surrounding community for ready access.

Staff recommends using NJ Ryan based on their ability to spread salt, their staff size and providing the most competitive hourly rates. The Village has utilized NJ Ryan on other projects and have found their services acceptable.

ACTION PROPOSED: Adopt Resolution.

RESOLUTION NO. 19-R-_____

A RESOLUTION APPROVING AND AUTHORIZING THE MAYOR AND VILLAGE CLERK TO EXECUTE AN AGREEMENT WITH N.J. RYAN TREE & LANDSCAPING, LLC TO PROVIDE SNOW REMOVAL AND SALTING SERVICES FOR THE 2019/2020 WINTER SEASON IN THE VILLAGE OF WILLOWBROOK

WHEREAS, the Village has, from time to time, contracted with contractors to assist the Village Public Works Department with snow removal and street salting services on an as-needed basis; and

WHEREAS, the Village sought requests for proposals for snow removal and street salting services for the 2019/2020 winter season; and

WHEREAS, upon review of all proposals received, the Village has determined N.J. Ryan Tree & Landscaping, LLC to be the lowest proposal responder and the Village has further determined that it is in the best interest of the Village to enter into an agreement with N.J. Ryan Tree & Landscaping, LLC for snow removal and street salting services for the 2019/2020 winter season.

[REMAINDER OF PAGE INTENTIONALLY LEFT BLANK]

NOW, THEREFORE, BE IT RESOLVED by the Mayor and Board of Trustees of the Village of Willowbrook, DuPage County, Illinois, that the Mayor and Village Clerk be and the same are hereby authorized and directed to execute an Agreement with N.J. Ryan Tree & Landscaping, LLC, for snow removal and street salting services for the 2019/2020 winter season, on a time and material basis, in an estimated amount of $60,000.00, in substantially the same form as in the Agreement attached hereto as Exhibit "A" and made a part hereof, which Agreement is hereby approved.

ADOPTED and APPROVED this 11th day of November, 2019.

ROLL CALL VOTE: AYES: _____

NAYS: _____

ABSTENTIONS: _____

ABSENT: _____

APPROVED:

_____
Frank A. Trilla, Mayor

ATTEST:

_____
Leroy R. Hansen, Village Clerk

AGREEMENT FOR SNOW REMOVAL AND ICE CONTROL SERVICES AGREEMENT BETWEEN N.J. RYAN TREE & LANDSCAPING, LLC AND THE VILLAGE OF WILLOWBROOK

This Agreement, dated this 11th day of November, 2019, by and between N.J. Ryan Tree & Landscaping, LLC (the "CONTRACTOR"), and the VILLAGE OF WILLOWBROOK (the "VILLAGE") and in consideration of the mutual covenants contained herein, agree as follows:

RECITALS

WHEREAS, the VILLAGE may require assistance from an outside contractor for snow and ice control services for the 2019/2020 winter season for the VILLAGE roads and streets as set forth in this Agreement; and

WHEREAS, the VILLAGE desires to contract with CONTRACTOR for the purpose of providing said snow and ice control services for the 2019/2020 winter season on an as-needed basis.

NOW THEREFORE, in consideration of the promises and the mutual covenants herein set forth, and other good and valuable consideration, the sufficiency of which is hereby mutually acknowledged, it is agreed as follows:

1. DEFINITIONS

"VILLAGE" shall mean the Village of Willowbrook, DuPage County, Illinois.

2. DURATION OF AGREEMENT

CONTRACTOR agrees to furnish and provide all labor and equipment designated necessary to provide snow removal and ice control measures for municipal roads and streets in the VILLAGE commencing on November 15, 2019 and ending April 30, 2020.

3. WINTER ROAD CONTRACTOR CHARGE

The VILLAGE shall pay CONTRACTOR an hourly rate as set forth in Exhibit "A", attached hereto and made a part hereof, for all work performed. The per-hour rate includes the cost of equipment provided by CONTRACTOR and the cost of the equipment operator or driver. Labor charges for hand-shoveling of snow will be billed separately at the "Laborer" rate.

Snow removal, whether by plowing or hand-shoveling shall be billed separately. Salting operations, which are done concurrently with snow plowing, must be separately indicated as such on invoices. Salt shall be provided by VILLAGE.

4. STANDARDS FOR SNOW REMOVAL AND SALTING

A. CONTRACTOR shall report and be on-site and ready to commence snow removal and salting operations within one (1) hour of notification by the Village Public Works Department. CONTRACTOR shall not undertake any snow removal or salting operations without express direction of the Village Public Works Department.

B. VILLAGE shall provide CONTRACTOR with a schedule of streets, sidewalks and other areas for snow removal and/or salting.

C. Within twenty-four (24) hours after completion of snow plowing, snow removal and/or salting operations, CONTRACT shall contact the Village Public Works Department, at a telephone number to be provided by the VILLAGE, to report the equipment employed and the starting time and ending time of the manpower and equipment used in services provided.

D. Snow plow blades must be capable of removing snow to within approximately one-quarter (1/4) inch of the paved surface. A "bare pavement" policy will not be used.

E. CONTRACTOR shall provide the Village Public Works Department with a twenty-four (24) hour a day access telephone number to contact CONTRACTOR or its designated supervisor throughout the duration of the Agreement.

5. SALTING

A. If and when salting is required, salt shall be applied by CONTRACTOR to streets and other areas designated by the Village Public Works Department when authorized by the Village Public Works Department. As salt is so detrimental to the VILLAGE streets and sidewalks and causes road replacement earlier than necessary, all efforts will be made to limit salt use. CONTRACTOR will clear salt mounds in excess of even distribution within four (4) hours after receiving notice that such a condition exists.

B. Salting operations, when requested, must commence immediately after the final snow plow pass has been made or as directed by the Village Public Works Department. Salting operations should be applied at a rate and ratio to be determined to by the Village Public Works Department and may be adjusted by the Village Public Works Department, depending on conditions. All trucks should be equipped with controls to adjust the volume and rate of the salt spreading.

C. Any questions as to the meaning or intent of any of the above provisions should be directed to the Village Public Works Department.

6. INDEMNIFICATION

A. To the fullest extent permitted by law, CONTRACTOR shall indemnify and hold harmless the VILLAGE, its officers, officials, agents, volunteers, and employees from and against all claims, damages, losses, and expenses, including but not limited to attorneys' fees, arising out of or resulting from the services to be provided by CONTRACTOR to the VILLAGE, as detailed herein, provided that such claim damage, loss or expense is attributable to bodily injury, sickness, disease or death, or to injury to or destruction of tangible property, including loss of use resulting therefrom, but only to the extent caused by negligent or willful acts or omissions of CONTRACTOR, anyone directly or indirectly employed or contracted by CONTRACTOR. Such obligation shall not be constructed to negate, abridge, or reduce other rights or obligations to indemnify which would otherwise exist as to a party or person described in this paragraph. Sickness or injury to employees of CONTRACTOR that arise out of and in the course of the employee's employment shall be subject to the provisions of the Illinois Workers' Compensation Act and Occupational Diseases Act.

B. In claims against any person or entity indemnified under this paragraph by an employee or agent of CONTRACTOR or subcontractor, anyone directly or indirectly employed by the CONTRACTOR or subcontractor, the indemnification obligation under this paragraph shall not be limited by a limitation on amount of type of damages, compensation or benefits payable by or for CONTRACTOR under the Workers' Compensation Act, disability benefits acts or other employees benefit acts.

C. CONTRACTOR understands and agrees that any insurance policies required by this Agreement, or otherwise provided by CONTRACTOR shall in no way limit the responsibility to indemnify, keep and save harmless and defend the VILLAGE, its officers, officials, agents, volunteers, and employees as herein provided.

7. INSURANCE

CONTRACTOR shall procure and maintain for the duration of this Agreement insurance against claims for injuries to persons or damage to property which may arise from or in connection with the performance of snow removal services by CONTRACTOR its assents, representatives, employees or subcontractors.

A. MINIMUM SCOPE OF INSURANCE

Coverage shall be at least as broad as:

1. Insurance Series Offices Commercial General Liability occurrence from CG 0001 (ED>11/85)

2. Insurance Service Office from CA (Ed. 1/87) covering Automobile Liability, symbol 01 "any auto" and endorsement CA 0029 (Ed. 12/88) changes in Business Auto and Truckers coverage forms-Insured Contract; and

3. Worker's Compensation as required by the Labor Code of the State of Illinois and Employers' Liability Insurance.

B. MINIMUM LIMITS OF INSURANCE

CONTRACTOR shall maintain limits no less than:

1. Commercial General Liability:
   $1,000,000 combined single limit per occurrence for bodily injury, personal injury, and property damage. Minimum General Aggregate shall be no less than $2,000,000 per person per aggregate:

2. Excess Liability Insurance:
   $10,000,000 combined single limit per occurrence for bodily injury, personal injury, and property damage. Minimum Aggregate shall be no less than $10,000,000 per person aggregate;

3. Automobile Liability:
   $1,000,000 combined single limit per accident for bodily injury and property damage and;

4. Workers' Compensation and Employers' Liability:
   Workers' Compensation limits as required by the Labor Code of the State of Illinois and Employers' Liability Limits of $500,000 per accident.

C. DEDUCTIBLE AN SELF-INSURED RETENTIONS

Any deductibles or self-insured retentions must be declared to and approved by the VILLAGE.

D. OTHER INSURANCE PROVISIONS

The policies are to contain, or be endorsed to contain the following provisions:

1. Commercial General Liability and Automobile Liability Coverages:

   a. The VILLAGE, its officers, officials, agents, volunteers, and employees are to be covered as additional insureds as respects: liability arising out of work performed by or on behalf of CONTRACTOR as well as equipment procured, owned, leased, hired or borrowed by CONTRACTOR. The coverage shall contain no special limits on the scope of the protection afforded to the VILLAGE, its officers, officials, agents, volunteers, or employees;

   b. CONTRACTOR'S insurance coverage shall be primary insurance as respects the VILLAGE, its officers, officials, agents, volunteers, and employees. Any insurance or self-insurance maintained by the VILLAGE, its officers, officials, agents, volunteers, or employees shall be in excess of CONTRACTOR'S insurance and shall not contribute with it;

   c. Any failure to comply with reporting provisions of the policies shall not affect coverage provided to the VILLAGE, its officers, officials, agents, volunteers or employees; and

   d. Coverage shall state that CONTRACTOR'S insurance shall apply separately to each insured against whom a claim or suit is brought, except with respect to the limits or the insurer's liability.

   e. The CONTRACTOR shall provide the Village Administrator a copy of proof of insurance prior to beginning work for the VILLAGE.

2. Workers' Compensation and Employers' Liability Coverage:

The insurer shall agree to waive all rights of subrogation against the VILLAGE, its officers, officials, agents, volunteers, and employers and for losses arising from work performed by the CONTRACTOR for the Village.

3. All Coverages:

Each insurance policy required by this clause shall be endorsed to state that the coverage shall not be suspended, voided, canceled, reduced in coverage or in limits, except after thirty (30) days' prior written notice, by certified mail

return receipt requested, has been given to the VILLAGE.

8. EMPLOYMENT PRACTICES

A. During the performance of the services contemplated by the Agreement, CONTRACTOR hereby agrees as follows:

1. CONTRACTOR shall not discriminate against any employee or applicant for employment because of race, color, religion, sex, marital status, national original or ancestry, age, physical or mental handicap, unrelated to ability, or unfavorable discharge from military service; and further, that it will examine all job classifications to determine if minority persons or women are underutilized and will take appropriate affirmative action to rectify any such underutilization.

2. If CONTRACTOR hires additional employees in order to perform this Agreement or any portion hereof, CONTRACTOR will determine the availability (in accordance with the Department's Rules and Regulations) of minorities and women in the area (s) from which it may reasonably recruit and it will hire for each job classification for which employees are hired in such a way that minorities and women are not underutilized.

3. In all solicitations or advertisements for employees placed by it or on its behalf, it will state that all applicants will be affected equal opportunity without discrimination because of race, color, religion, sex, marital status, national origin or ancestry, age, physical or mental handicap unrelated to ability, or an unfavorable discharge from military service.

4. CONTRACTOR shall send to each labor organization or representative of workers with which it has or is bound by a collective bargaining or other agreement or understanding, a notice advising such labor organization or representative of CONTRACTOR'S obligations under the Illinois Human Rights Act and the Department's Rules and Regulations. If any such labor organization or representative fails or refuses to cooperate with and comply with such Act and Rules and Regulations, CONTRACTOR will promptly so notify the Illinois Department of Human Rights and the contracting agency and will recruit employees from other sources when necessary to fulfill its obligations thereunder.

5. CONTRACTOR shall submit reports as required by the Illinois Department of Human Rights, Rules and Regulations, and furnish all relevant information as may from time to time be requested by the department or contracting agency, and in all respects comply with the

Illinois Human Rights Act and the Department's Rule and Regulations.

6. CONTRACTOR shall not maintain or provide for its employees segregated facilities at any of its establishments, and not permit its employees to perform their services at any location, under its control, where segregated facilities are maintained. As used in this section, the term "segregated facilities" means any waiting rooms, work areas, restrooms and washrooms, restaurants and other eating areas, time clocks, locker rooms and other storage or dressing areas, parking lots, drinking fountains, recreation or entertainment areas, transportation, and housing facilities provided for employees which are segregated by explicit directive or are in fact segregated on the basis of race, creed, color, or national origin because of habit, location custom, or otherwise.

9. DAMAGE TO PROPERTY

CONTRACTOR shall promptly repair and/or replace, at its sole cost and expense, all private or public property damage caused or resulting from its willful or negligent actions while performing any work under this Agreement. In addition, CONTRACTOR shall be responsible for the full value of replacing mailboxes that are knocked down due to CONTRACTOR's wilful or negligent act (i.e. driving off the road into the mailbox or backing into the mailbox).

Damaged mailboxes shall have immediate, temporary repair to assure mail delivery pending permanent repair.

CONTRACTOR shall repair or replace damaged property within ten (10) days of oral or written notification from the VILLAGE, except damage to turf areas, which repairs are not to start earlier than May 10, 2020 and shall be completed no later than June 1, 2020. Turf damage is to be repaired with topsoil and seed.

In the event CONTRACTOR fails to make any repairs in a timely manner, the VILLAGE shall have the right to have any damage corrected and deduct the cost of same from any payments due and owing CONTRACTOR under the terms of this Agreement.

10. DRUG FREE WORKPLACE

CONTRACTOR shall provide a drug-free workplace by:

A. Publishing a statement:

1. Notifying employees that the unlawful manufacture, distribution,

dispensation, possession or use of a controlled substance, including cannabis, is prohibited in CONTRACTOR'S workplace.

2. Specifying the actions that will be taken against employees for violations of such prohibition.

3. Notifying the employee that, as a condition of employment on this Agreement, the employee will:

   a. Abide by the terms of the statement; and

   b. Notify the employer of any criminal drug statute conviction for a violation occurring in the work place no later than five (5) days after such conviction.

B. Establishing a drug-free awareness program to inform employees about:

   1. The dangers of drug abuse in the workplace;

   2. CONTRACTOR'S policy of maintaining a drug-free workplace;

   3. Any available drug counseling, rehabilitation, and employee assistance program; and

   4. The penalties that may be imposed upon employees for drug violation.

A. Making it a requirement to give a copy of the statement required by Subparagraph 11 (A) to each employee engaged in the performance of the Agreement, and to post the statement in a prominent place in the workplace.

B. Notifying the VILLAGE within ten (10) days after receiving notice under Subparagraph 12 (A) 3 (b) from an employee or otherwise receiving actual notice of such conviction.

C. Imposing a sanction on, or requiring the satisfactory participation in a drug abuse assistance or rehabilitation program by any employee who is convicted, as required by 30 ILCS 580/5.

D. Assisting employees in selecting a course of action in the event drug counseling treatment and rehabilitation is required and indicating that trained referral team is in place.

E. Making a good faith effort to continue to maintain a drug-free workplace through implementation of this section.

11. CERTIFICATIONS

A. CONTRACTOR shall submit to the VILLAGE a certification that:

1. CONTRACTOR is not delinquent in the payment of taxes to the Illinois Department of Revenue in accordance with 65 ILCS 5/11-42.1-1;

2. CONTRACTOR is not barred from contracting as a result of a violation of either section 33D-3 (bid-rigging) or 33E-4 (bid-totaling) of the Criminal Code of 1961 (720 ILCS 5/33 E-3 and 5/33 E-4);

3. CONTRACTOR maintains and will maintain a drug free workplace in accordance with the Drug Free Workplace Act (30 ILCS 580/1 et seq.)

4. CONTRACTOR provides equal employment opportunities in accordance with the Illinois Human Rights Act (775 ILCS 580/1 et seq.); and

12. NONPERFORMANCE

In the event CONTRACTOR breaches any term of this Agreement or fails to perform its obligations under the terms of this Agreement in a timely and good workman-like manner, the VILLAGE reserves the right to receive the services of or replacement contractor and N.J. Ryan Tree & Landscape, LLC shall be liable to the VILLAGE for any and all increased costs for snow removal and salting services in excess of the rates set forth on Exhibit "A", attached hereto and made part hereof.

13. NOTICE

Any notice or statement by any party shall be deemed to be sufficiently given (unless otherwise stated) if delivered in person, sent by United States registered or certified mail, postage prepaid, return receipt requested, or sent by overnight delivery service (e.g. Federal Express) to the notified party at its address as set forth herein:

If to Village:	Village Administrator Village of Willowbrook 835 Midway Drive Willowbrook, Illinois 60527
If to Contractor:	N.J. Ryan Tree & Landscape, LLC 17271 IL Route 23 DeKalb, Illinois 60115

These addresses shall remain in effect unless another address is substituted by written notice.

14. SOLE AGREEMENT

This Agreement and any exhibits or attachments hereto shall constitute the sole agreement of the parties relating to snow removal in the VILLAGE. Neither party will be bound by any statements, warranties, or promises, oral or written, unless such statements, warranties, or promises are set forth specially in this Agreement.

15. SEVERABILITY

This Agreement shall be governed in all respects by the laws of the State of Illinois. If any word, clause, phrase, provision, or portion of this Agreement or the application thereof to any person or circumstances shall be invalid, or enforceable under applicable law, such event shall not affect, impair or render invalid or unenforceable the remainder of this Agreement nor any other clause, phrase, provision, or portion hereof to other persons or circumstances.

16. WAIVER OF BREACH

No term of this Agreement shall be deemed waived, nor shall any breach be deemed excused unless the waiver is in writing and signed by the party claimed to have waived. Furthermore, any consent to or waiver of a breach will not constitute consent to or waiver of or excuse of any other different or subsequent breach.

17. ENFORCEMENT

The parties expressly agree that any action brought to enforce the terms of this Agreement or arising out of the parties' relationship shall be brought in the Circuit Court of DuPage County, Illinois, and hereby waive any arguments concerning jurisdiction or forum non-convenience.

18. ASSIGNMENT

This Agreement shall be binding on the parties and their respective successors and assigns. Neither party shall assign this Agreement without the prior written consent of the other party.

19. AMENDMENT

This Agreement shall not be amended or modified other than in writing signed by both parties.

20. SECTION HEADINGS

The section headings contained in this Agreement are for reference purposes only and do not in any way affect the meaning or interpretation of this Agreement.

21. EFFECTIVE DATE

For purposes of this Agreement, the effective date shall be the date this Agreement is executed by the VILLAGE.

ACCEPTED:
N.J. RYAN TREE & LANDSCAPING, LLC.

By: _____
DaRin Ryan, Owner

Date: _____

EXECUTED by CONTRACTOR in presence of:

Witness: _____

ACCEPTED:
VILLAGE OF WILLOWBROOK

By: _____
Frank A. Trilla, Mayor

Date: _____

ATTEST:

_____
Leroy R. Hansen, Village Clerk

Exhibit A

NJ Ryan Tree & Landscape LLC
17271 IL Route 23
DeKalb, IL 60115
630-800-8767

Snow removal services for Village of Willowbrook

Pick up truck with plow	$115 per hour
Bobcat with box pusher	$140 per hour
6 Wheeler	$ 85 per hour
Combo loader	$160 per hour
Laborer	$ 75 per hour
Dump truck with plow & salt spreader	$145 per hour

Equipment List

(4) 2018 S 650 Bobcat
(2) 2016 S 850 Bobcat
(2) 2017 International Roll off
(2) 2012 Tandem Roll off
(2) 2017 F250 Plow trucks
(4) 2017 F450/550 Dump trucks with plow & spreader
(2) 2019 S 650 Bobcat
(2) 2018 John Deere F1435 with plow
(1) 2018 V519 Telly Bobcat
(2) 2016 John Deere 244K Loader

VILLAGE OF WILLOWBROOK

BOARD MEETING
AGENDA ITEM - HISTORY/COMMENTARY

A RESOLUTION APPROVING AND AUTHORIZING THE PURCHASE OF TWO (2) 2019 FORD F-350 XL 4X2 PICK-UP TRUCKS, EXCLUDING SERVICE BODIES, FROM WILLOWBROOK FORD/KIA, INC. AT A TOTAL COST NOT TO EXCEED $60,874.00 PLUS EXTENDED WARRANTIES IN THE AMOUNT OF $3,625.00 PER VEHICLE

AGENDA NO. 9

AGENDA DATE: 11/11/19

STAFF REVIEW: Joe Coons, Superintendent of Public Works SIGNATURE: J. Coons /mm

LEGAL REVIEW: Tom Bastian, Village Attorney SIGNATURE: Tom Bastian/mm

RECOMMENDED BY: Brian Pabst Village Administrator SIGNATURE: Brian Pabst

REVIEWED & APPROVED BY COMMITTEE: YES ☒ NO ☐ N/A ☐

ITEM HISTORY (PREVIOUS VILLAGE BOARD REVIEWS, ACTIONS RELATED TO THIS ITEM, OTHER HISTORY)

The FY 19-20 Budget for the Municipal Services Department includes the replacement of two (2) Public Works service vehicles. The Public Works Division requests to replace two (2) existing Ford F350 service body trucks. The 2006 unit has 118,494 miles and the 2008 unit has 162,550 miles. Both vehicles are one-ton rated pick-up trucks outfitted with a service body. The Village's long-range plan anticipates a 5-year replacement cycle for public works vehicles, making them both overdue for replacement. In addition, both vehicles have reached their useful lifespan and are beginning to experience maintenance issues requiring costly repairs.

To obtain replacement vehicles, the Village has historically utilized the Suburban Purchasing Cooperative (SPC), which is a joint purchasing program for local governments. The vehicles available for purchase within this program were obtained through a competitive bidding process of three area dealerships. Through this program, the Village could obtain these two (2) replacement vehicles at set prices. Historically, the Village has also made an effort to offer this business to our local Ford dealership, if possible. Therefore, Willowbrook Ford was contacted and asked to also provide price proposals on the same vehicles. This year's low bidder is Willowbrook Ford in Willowbrook, Illinois.

Vehicle	Budgeted Amount	Suburban Purchase – Currie Motors Price	Willowbrook Ford Price	Westfield Ford
2019 Ford F-350 XL 4x2 One-Ton Pick-Up Truck	$30,500	$30,604.00	$30,437.00	$35,353.81
2019 Ford F-350 XL 4x2 One-Ton Pick-up truck	$30,500	$30,604.00	$30,437.00	$35,353.81

Willowbrook Ford came in as the lowest bid under Westfield Ford and the SPC Currie Motors. In addition, the vehicles would be purchased locally, thereby supporting a Willowbrook business.

STAFF RECOMMENDATION

The total amount budgeted for each pick-up truck with service body was $56,196 or $112,392. The trucks will need to be upfitted with the service body in addition to the base pick-up truck. This was taken into consideration when the new trucks were budgeted. A separate agenda item with the cost of the service body will be presented at a future Board meeting.

The base warranty covers 3-years and 36,000-miles. A 7-Year 60,000-mile warranty with no deductible was recommended by the Municipal Services Committee and is priced at $3,625.00 per vehicle. This is the same warranty program that the police department uses on the new vehicles that they purchase. The extended warranty was not considered when the trucks were budgeted this past April. The Resolution attached is for the base pick-up truck with the extended warranty for $34,062 per vehicle or $68,124 total.

ACTION PROPOSED: Adopt Resolution.

RESOLUTION NO. 19-R-_____

A RESOLUTION APPROVING AND AUTHORIZING THE PURCHASE OF TWO (2) 2019 FORD F-350 XL 4X2 PICK-UP TRUCKS, EXCLUDING SERVICE BODIES, FROM WILLOWBROOK FORD/KIA, INC. AT A TOTAL COST NOT TO EXCEED $60,874.00 PLUS EXTENDED WARRANTIES IN THE AMOUNT OF $3,625.00 PER VEHICLE

BE IT RESOLVED by the Mayor and Board of Trustees of the Village of Willowbrook, DuPage County, Illinois that the purchase of two (2) 2019 Ford F-350 XL 4x2 pick-up trucks, excluding service bodies, from Willowbrook Ford/KIA, Inc. at a total cost not to exceed $60,874.00 plus extended warranties in the amount of $3,625.00 per vehicle, is hereby approved.

BE IT FURTHER RESOLVED that the Village Administrator of the Village of Willowbrook is hereby authorized and directed, on behalf of the Village of Willowbrook, to execute purchase orders for said vehicles. Copies of said purchase orders and extended warranty information are attached hereto as Exhibit "A" and made a part hereof.

ADOPTED and APPROVED this 11th day of November, 2019.

ROLL CALL VOTE: AYES: _____

NAYS: _____

ABSTENTIONS: _____

ABSENT: _____

APPROVED:

_____
Frank A. Trilla, Mayor

ATTEST:

_____
Leroy R. Hansen, Village Clerk

870343.1

EXHIBIT A

Willowbrook Ford

Prepared for: Mr. Andrew Passero, Village of Willowbrook
Office: 630-323-8215
Email: apassero@willowbrook.il.us

2019 F-350 Chassis 4x2 SD Super Cab 168" WB SRW XL (X3E)
Price Level: 915

Client Proposal

Prepared by:
Garrick Mackiney
Office: 630-986-5000
Email: garrick.fleet@gmail.com
Quote ID: 121318G041
Date: 07/31/2019

Prepared for: Mr. Andrew Passero
Village of Willowbrook
Prepared by: Garrick Mackiney
07/31/2019

Willowbrook Ford, Inc. | 7301 S Kingery Hwy Willowbrook Illinois | 605275581

2019 F-350 Chassis 4x2 SD Super Cab 168" WB SRW XL (X3E)

Price Level: 915 | Quote ID: 121318G041

Table of Contents

Description	Page
Cover Page	1
Table of Contents	2
Selected Equip & Specs	3
Warranty	13
As Configured Vehicle	14
Pricing Summary - Single Vehicle	17
Window Sticker	18
Vehicle Dimension and Performance	20

Prepared for: Mr. Andrew Passero
Village of Willowbrook
Prepared by: Garrick Mackiney
07/31/2019

Willowbrook Ford, Inc. | 7301 S Kingery Hwy Willowbrook Illinois | 605275581

2019 F-350 Chassis 4x2 SD Super Cab 168" WB SRW XL (X3E)

Price Level: 915 | Quote ID: 121318G041

Selected Equip & Specs

Dimensions

- Exterior length: 253.3"
- Exterior width: 80.0"
- Wheelbase: 168.0"
- Rear track: 68.1"
- Rear tire outside width: 79.6"
- Front legroom: 43.9"
- Front headroom: 40.8"
- Front hiproom: 62.5"
- Front shoulder room: 66.7"
- Passenger volume: 116.0cu.ft.
- Maximum cargo volume: 31.6cu.ft.
- Cab to axle: 60.0"
- Exterior height: 78.3"
- Front track: 68.3"
- Turning radius: 28.5'
- Min ground clearance: 8.6"
- Rear legroom: 33.5"
- Rear headroom: 40.3"
- Rear hiproom: 64.7"
- Rear shoulder room: 65.8"
- Cargo volume: 31.6cu.ft.

Powertrain

- 385hp 6.2L SOHC 16 valve V-8 engine with variable valve control, SMPI
- federal
- Rear-wheel drive
- Fuel Economy Highway: N/A
- Recommended fuel : regular unleaded
- TorqShift 6 speed automatic transmission with overdrive
- Fuel Economy City: N/A
- **Transmission PTO provision**

Suspension/Handling

- Front Twin I-Beam independent suspension with anti-roll bar, HD shocks
- Firm ride Suspension
- Front and rear 18 x 8 argent steel wheels
- Rear Stirling rigid axle leaf spring suspension with anti-roll bar, HD shocks
- Hydraulic power-assist re-circulating ball Steering
- LT275/65SR18 EBSW AS front and rear tires

Body Exterior

- 4 doors
- Reverse opening right rear passenger
- **Turn signal indicator in mirrors**
- Black bumpers
- Trailer harness
- Front and rear 18 x 8 wheels
- Reverse opening left rear passenger
- **Driver and passenger power remote heated, manual folding door mirrors with turn signal indicator**
- Black door mirrors
- **Side steps**
- Clearcoat paint
- 2 front tow hook(s)

Convenience

- Manual air conditioning with air filter
- **Driver and passenger 1-touch up**
- **Remote power door locks with 2 stage unlock and illuminated entry**
- **Power windows**
- **Driver and passenger 1-touch down**
- Manual tilt steering wheel

Selected Equip & Specs (cont'd)

- Manual telescopic steering wheel
- 1 1st row LCD monitor
- Passenger visor mirror
- * **Driver and passenger door bins**
- Upfitter switches
- Day-night rearview mirror
- Front cupholders
- Full overhead console
- * **Rear door bins**

Seats and Trim

- Seating capacity of 6
- 4-way driver seat adjustment
- 4-way passenger seat adjustment
- 60-40 folding rear split-bench seat
- Front 40-20-40 split-bench seat
- Manual driver lumbar support
- Centre front armrest with storage

Entertainment Features

- AM/FM stereo radio
- Fixed antenna
- 6 speakers

Lighting, Visibility and Instrumentation

- Halogen aero-composite headlights
- Fully automatic headlights
- Light tinted windows
- Tachometer
- Outside temperature display
- Trip computer
- Delay-off headlights
- Variable intermittent front windshield wipers
- Front reading lights
- Oil pressure gauge
- Low tire pressure warning
- Trip odometer

Safety and Security

- 4-wheel ABS brakes
- 4-wheel disc brakes
- ABS and driveline traction control
- Dual seat mounted side impact airbag supplemental restraint system
- * **Remote activated perimeter/approach lighting**
- * **Security system with SecuriLock immobilizer**
- Manually adjustable front head restraints
- Brake assist with hill hold control
- Electronic stability control
- Dual front impact airbag supplemental restraint system with passenger cancel
- Safety Canopy System curtain 1st and 2nd row overhead airbag supplemental restraint system
- * **Power remote door locks with 2 stage unlock and panic alarm**
- * **MyKey restricted driving mode**
- 3 manually adjustable rear head restraints

Dimensions

General Weights

* **Curb**	**6,010 lbs.**	GVWR	10,900 lbs.
Payload	4,970 lbs.		

Selected Equip & Specs (cont'd)

Front Weights

* **Front GAWR**	**4,700 lbs.**	* **Front curb weight**	**3,548 lbs.**
Front axle capacity	5,250 lbs.	* **Front spring rating**	**4,700 lbs.**
Front tire/wheel capacity	6,830 lbs.		

Rear Weights

Rear GAWR	6,780 lbs.	* **Rear curb weight**	**2,462 lbs.**
Rear axle capacity	7,230 lbs.	Rear spring rating	6,780 lbs.
Rear tire/wheel capacity	6,830 lbs.		

Trailering Type

Harness	Yes	Trailer sway control	Yes

General Trailering

* **5th-wheel towing capacity**	**16100 lbs.**	* **Gooseneck towing capacity**	**16100 lbs.**
* **Towing capacity**	**13500 lbs.**	* **GCWR**	**23000 lbs.**

Fuel Tank type

Capacity	40 gal.

Off Road

Min ground clearance	9 "

Interior cargo

Cargo volume	31.6 cu.ft.	Maximum cargo volume	31.6 cu.ft.

Rear Frame

Height loaded	27 "	Height unloaded	32 "

Powertrain

Engine Type

Block material	Iron	Cylinders	V-8
Head material	Aluminum	Ignition	Spark
Injection	Sequential MPI	Liters	6.2L
Orientation	Longitudinal	Recommended fuel	Regular unleaded
Valves per cylinder	2	Valvetrain	SOHC
Variable valve control	Yes		

Engine Spec

Bore	4.02"	Compression ratio	9.8:1
Displacement	379 cu.in.	Stroke	3.74"

Engine Power

SAEJ1349 AUG2004 compliant	Yes	Output	385 HP @5,750 RPM
Torque	430 ft.-lb @ 3,800 RPM		

Selected Equip & Specs (cont'd)

Alternator			
Type	HD	* **Amps**	**240**
Battery			
Amp hours	72	Cold cranking amps	650
Run down protection	Yes		
Transmission			
Electronic control	Yes	Lock-up	Yes
Overdrive	Yes	Speed	6
Type	Automatic		
Transmission Gear Ratios			
1st	3.974	2nd	2.318
3rd	1.516	4th	1.149
5th	0.858	6th	0.674
Reverse Gear ratios	3.128		
Transmission Torque Converter			
Stall ratio	1.90		
Transmission Extras			
Driver selectable mode	Yes	Sequential shift control	SelectShift
Oil cooler	Regular duty	* **PTO provision**	**Yes**
Drive Type			
Type	Rear-wheel		
Drive Feature			
Traction control	ABS and driveline	* **Power take-off provision**	**Yes**
* **Rear locking differential**	**Driver selectable**		
Drive Axle			
* **Ratio**	**4.3**		
Exhaust			
Material	Stainless steel	System type	Single
Emissions			
CARB	Federal		
fuel Economy			
Fuel type	Gasoline		
Fuel Economy (Alternate 1)			
Fuel type	E85		

Selected Equip & Specs (cont'd)

Driveability

Brakes

ABS	4-wheel	ABS channels	4
Type	4-wheel disc	Vented discs	Front and rear

Brake Assistance

Brake assist	Yes	Hill hold control	Yes

Suspension Control

Ride	Firm	Electronic stability control	Stability control with anti-roll

Front Suspension

Independence	Twin I-Beam independent	Anti-roll bar	Regular

Front Spring

Type	Coil	* **Grade**	**HD**

Front Shocks

Type	HD

Rear Suspension

Independence	Stirling rigid axle	Type	Leaf
Anti-roll bar	Regular		

Rear Spring

Type	Leaf	Grade	HD

Rear Shocks

Type	HD

Steering

Activation	Hydraulic power-assist	Type	Re-circulating ball

Steering Specs

# of wheels	2

Exterior

Front Wheels

Diameter	18"	Width	8.00"

Rear Wheels

Diameter	18"	Width	8.00"

Front and Rear Wheels

Selected Equip & Specs (cont'd)

Appearance	Argent	Material	Steel
Covers	Hub		
Front Tires			
Aspect	65	Diameter	18"
Sidewalls	BSW	Speed	S
Tread	AS	Type	LT
Width	275mm	LT load rating	E
RPM	652		
Rear Tires			
Aspect	65	Diameter	18"
Sidewalls	BSW	Speed	S
Tread	AS	Type	LT
Width	275mm	LT load rating	E
RPM	652		
Wheels			
Front track	68.3"	Rear track	68.1"
Turning radius	28.5'	Wheelbase	168.0"
Rear tire outside width	79.6"		
Body Features			
Front license plate bracket	Yes	Body material	Aluminum
Side impact beams	Yes	* **Side steps**	**Yes**
Front tow hook(s)	2		
Body Doors			
Door count	4	Left rear passenger	Reverse opening
Right rear passenger	Reverse opening		
Exterior Dimensions			
Length	253.3"	Body width	80.0"
Body height	78.3"	Cab to axle	60.0"
Axle to end of frame	47.2"	Frame section modulus	12.7cu.in.
Frame yield strength (psi)	50000.0	Frame rail width	34.1"
Front bumper to Front axle	38.3"	Cab to end of frame	107.2"
Front bumper to back of cab	146.3"		

Safety

Airbags

Driver front-impact	Yes	Driver side-impact	Seat mounted
Overhead	Safety Canopy System curtain 1st and 2nd row	Passenger front-impact	Cancellable

Selected Equip & Specs (cont'd)

Passenger side-impact	Seat mounted		
Seatbelt			
Height adjustable	Front		
Security			
* **Immobilizer**	**SecuriLock**	* **Panic alarm**	**Yes**
* **Restricted driving mode**	**MyKey**		

Seating

Passenger Capacity			
Capacity	6		
Front Seats			
Split	40-20-40	Type	Split-bench
Driver Seat			
Fore/aft	Manual	Reclining	Manual
Way direction control	4	Lumbar support	Manual
Passenger seat			
Fore/aft	Manual	Reclining	Manual
Way direction control	4		
Front Head Restraint			
Control	Manual	Type	Adjustable
Front Armrest			
Centre	Yes	Storage	Yes
Rear Seats			
Descriptor	Split-bench	Facing	Front
Folding	60-40	Folding position	Fold-up cushion
Type	Fixed		
Rear Head Restraints			
Control	Manual	Type	Adjustable
Number	3		
Front Seat Trim			
Material	Vinyl	Back material	Vinyl
Rear Seat Trim Group			
Material	Vinyl	Back material	Carpet

Convenience

Selected Equip & Specs (cont'd)

AC And Heat Type

Air conditioning	Manual	Air filter	Yes
Underseat ducts	Yes		

Audio System

Radio	AM/FM stereo	Radio grade	Regular
Seek-scan	Yes		

Audio Speakers

Speaker type	Regular	Speakers	6

Audio Antenna

Type	Fixed

LCD Monitors

1st row	1	Primary monitor size (inches)	2.3

Convenience Features

* **Retained accessory power**	**Yes**	12V DC power outlet	2
* **AC power outlet**	**1**	* **Back-up alarm**	**Yes**
Upfitter switches	Yes		

Door Lock Activation

* **Type**	**Power with 2 stage unlock**	* **Remote**	**Keyfob (front doors)**
* **Integrated key/remote**	**Yes**		

Instrumentation Type

Display	Analog

Instrumentation Gauges

Tachometer	Yes	Oil pressure	Yes
Engine temperature	Yes	Transmission fluid temp	Yes
Engine hour meter	Yes		

Instrumentation Warnings

Oil pressure	Yes	Engine temperature	Yes
Battery	Yes	Lights on	Yes
Key	Yes	Low fuel	Yes
Door ajar	Yes	Service interval	Yes
Brake fluid	Yes	Low tire pressure	Yes

Instrumentation Displays

Clock	In-radio display	Exterior temp	Yes
Systems monitor	Yes		

Instrumentation Feature

Selected Equip & Specs (cont'd)

Trip computer	Yes	Trip odometer	Yes
Steering Wheel Type			
Material	Urethane	Tilting	Manual
Telescoping	Manual		
Front Side Windows			
* **Window 1st row activation**	**Power**		
Windows Rear Side			
* **2nd row activation**	**Power**		
Window Features			
* **1-touch down**	**Driver and passenger**	* **1-touch up**	**Driver and passenger**
Tinted	Light		
Front Windshield			
Wiper	Variable intermittent		
Rear Windshield			
Window	Fixed		

Interior

Passenger Visor			
Mirror	Yes		
Rear View Mirror			
Day-night	Yes		
Headliner			
Coverage	Full	Material	Cloth
Floor Trim			
Coverage	Full	Covering	Vinyl/rubber
Trim Feature			
Gear shift knob	Urethane	Interior accents	Chrome
Lighting			
Dome light type	Fade	Front reading	Yes
* **Illuminated entry**	**Yes**	Variable IP lighting	Yes
Overhead Console Storage			
Storage	Yes	Type	Full
Storage			
* **Driver door bin**	**Yes**	Front Beverage holder(s)	Yes

Selected Equip & Specs (cont'd)

Glove box	Locking	* **Passenger door bin**	**Yes**
Illuminated	Yes	Instrument panel	Bin
Dashboard	Covered	* **Rear door bins**	**Yes**
Legroom			
Front	43.9"	Rear	33.5"
Headroom			
Front	40.8"	Rear	40.3"
Hip Room			
Front	62.5"	Rear	64.7"
Shoulder Room			
Front	66.7"	Rear	65.8"
Interior Volume			
Passenger volume	116.0 cu.ft.		

Prepared for: Mr. Andrew Passero
Village of Willowbrook
Prepared by: Garrick Mackiney
07/31/2019

Willowbrook Ford, Inc. | 7301 S Kingery Hwy Willowbrook Illinois | 605275581

2019 F-350 Chassis 4x2 SD Super Cab 168" WB SRW XL (X3E)

Price Level: 915 | Quote ID: 121318G041

Warranty

Standard Warranty

Basic			
Distance	36,000 miles	Months	36 months
Powertrain			
Distance	60,000 miles	Months	60 months
Corrosion Perforation			
Distance	Unlimited miles	Months	60 months
Roadside Assistance			
Distance	60,000 miles	Months	60 months

Prepared for: Mr. Andrew Passero
Village of Willowbrook
Prepared by: Garrick Mackiney
07/31/2019

Willowbrook Ford, Inc. | 7301 S Kingery Hwy Willowbrook Illinois | 605275581

2019 F-350 Chassis 4x2 SD Super Cab 168" WB SRW XL (X3E)

Price Level: 915 | Quote ID: 121318G041

As Configured Vehicle

Code	Description	MSRP
Base Vehicle		
X3E	Base Vehicle Price (X3E)	$35,820.00
Packages		
630A	Order Code 630A *Includes:* *- Engine: 6.2L 2-Valve SOHC EFI NA V8 (Flex-Fuel)* *- Transmission: TorqShift 6-Speed Automatic (6R140) Includes SelectShift.* *- GVWR: 10,900 lb Payload Package* *- Tires: LT275/65Rx18E BSW A/S* *- Wheels: 18" Argent Painted Steel Includes painted hub covers/center ornaments.* *- HD Vinyl 40/20/40 Split Bench Seat Includes center armrest, cupholder, storage and driver's side manual lumbar.* *- Radio: AM/FM Stereo Includes 6-speakers.*	N/C
Powertrain		
996	Engine: 6.2L 2-Valve SOHC EFI NA V8 (Flex-Fuel)	Included
44P	Transmission: TorqShift 6-Speed Automatic (6R140) *Includes SelectShift.*	Included
X4M	Electronic-Locking w/4.30 Axle Ratio	$390.00
STDGV	GVWR: 10,900 lb Payload Package Complete restrictions/requirements not available.	Included
Wheels & Tires		
TCH	Tires: LT275/65Rx18E BSW A/S	Included
64F	Wheels: 18" Argent Painted Steel *Includes painted hub covers/center ornaments.*	Included
Seats & Seat Trim		
A	HD Vinyl 40/20/40 Split Bench Seat *Includes center armrest, cupholder, storage and driver's side manual lumbar.*	Included
Other Options		
PAINT	Monotone Paint Application	STD

Prepared for: Mr. Andrew Passero
Village of Willowbrook
Prepared by: Garrick Mackiney
07/31/2019

Willowbrook Ford, Inc. | 7301 S Kingery Hwy Willowbrook Illinois | 605275581

2019 F-350 Chassis 4x2 SD Super Cab 168" WB SRW XL (X3E)

Price Level: 915 | Quote ID: 121318G041

As Configured Vehicle (cont'd)

Code	Description	MSRP
168WB	168" Wheelbase	STD
90L	Power Equipment Group *Deletes passenger side lock cylinder. Includes upgraded door-trim panel.* *Includes:* *- Accessory Delay* *- Advanced Security Pack* *Includes SecuriLock Passive Anti-Theft System (PATS) and inclination/intrusion sensors.* *- Trailer Tow Mirrors w/Power Heated Glass* *Includes manual telescoping, heated convex spotter mirror and integrated clearance lamps/turn signals.* *- MyKey* *Includes owner controls feature.* *- Power Front & Rear Side Windows* *Includes 1-touch up/down driver/passenger window.* *- Power Locks* *- Remote Keyless Entry*	$915.00
67X	Extra Heavy-Service Suspension Package *Includes pre-selected extra heavy-service front springs (see Order Guide Supplemental Reference for springs/FGAWR of specific vehicle configurations). Recommended only on vehicles which will permanently utilize aftermarket equipment such as heavy-duty winches, brush guards or other apparatus which loads the front axle to the specified Gross Axle Weight Rating (GAWR). NOTE 1: May result in a deterioration of ride quality. NOTE 2: Vehicle ride height will increase with the addition of this package.*	$125.00
62R	Transmission Power Take-Off Provision *Includes mobile and stationary PTO modes.*	$280.00
18A	Upfitter Interface Module	$295.00
67E	Extra Extra Heavy-Duty Alternator (240 Amp)	N/C
18B	Platform Running Boards	$445.00
43C	110V/400W Outlet *Includes 1 in-dash mounted outlet.*	$75.00
STDRD	Radio: AM/FM Stereo *Includes 6-speakers.*	Included
76C	Exterior Backup Alarm (Pre-Installed) *Custom accessory.*	$140.00

Emissions

425	50-State Emissions System	STD

Interior Colors

Prepared for: Mr. Andrew Passero
Village of Willowbrook
Prepared by: Garrick Mackiney
07/31/2019

Willowbrook Ford, Inc. | 7301 S Kingery Hwy Willowbrook Illinois | 605275581

2019 F-350 Chassis 4x2 SD Super Cab 168" WB SRW XL (X3E)

Price Level: 915 | Quote ID: 121318G041

As Configured Vehicle (cont'd)

Code	Description	MSRP
AS_01	Medium Earth Gray	N/C
Primary Colors		
Z1_01	Oxford White	N/C
SUBTOTAL		$38,485.00
Destination Charge		$1,295.00
TOTAL		$39,780.00

Prepared for: Mr. Andrew Passero
Village of Willowbrook
Prepared by: Garrick Mackiney
07/31/2019

Willowbrook Ford, Inc. | 7301 S Kingery Hwy Willowbrook Illinois | 605275581

2019 F-350 Chassis 4x2 SD Super Cab 168" WB SRW XL (X3E)

Price Level: 915 | Quote ID: 121318G041

Pricing Summary - Single Vehicle

	MSRP
Vehicle Pricing	$39,780.00
Pre-Tax Adjustments	
Description	
Government Pricing Adjustment *State agency Pricing*	-$9,500.64
Subtotal	$30,279.36
Post-Tax Adjustments	
Description	
Municipal Plates and Title fee	$158.00
Total	$30,437.36

Customer Signature

Acceptance Date

Prepared for: Mr. Andrew Passero
Village of Willowbrook
Prepared by: Garrick Mackiney
07/31/2019

Willowbrook Ford, Inc. | 7301 S Kingery Hwy Willowbrook Illinois | 605275581

2019 F-350 Chassis 4x2 SD Super Cab 168" WB SRW XL (X3E)

Price Level: 915 | Quote ID: 121318G041

Major Equipment

(Based on selected options, shown at right)
6.2L V-8 SOHC w/SMPI 385hp
TorqShift 6 speed automatic w/OD

Exterior: Oxford White
Interior: Medium Earth Gray

* Rear locking differential driver selectable
* Brake assistance
* LT 275/65R18 E BSW AS S-rated tires
* Firm suspension
* Air conditioning
* AM/FM stereo with seek-scan
* Dual power remote heated mirrors
* 18 x 8 steel wheels
* Driver and front passenger seat mounted side airbags
* Tachometer
* Underseat ducts
* 60-40 folding rear split-bench
* Side steps
* Front axle capacity: 5250 lbs.
* Front spring rating: 4700 lbs.
* Frame section modulus: 12.7 cu.in.
* Cab to axle: 60"
* Transmission PTO Provision
* 4-wheel ABS
* Traction control
* Battery with run down protection
* Advance Trac w/Roll Stability Control
* Tinted glass
* Daytime running
* Variable intermittent wipers
* Dual front airbags w/passenger cancel
* SecuriLock immobilizer
* Message Center
* Reclining front split-bench seats
* Vinyl seats
* Steering-wheel mounted audio controls
* Rear axle capacity: 7230 lbs.
* Rear spring rating: 6780 lbs.
* Frame Yield Strength 50000 psi
* Axle to end of frame: 47.2"

Fuel Economy

As Configured Vehicle	MSRP
STANDARD VEHICLE PRICE	$35,820.00
Order Code 630A	N/C
Monotone Paint Application	STD
168" Wheelbase	STD
50-State Emissions System	STD
Electronic-Locking w/4.30 Axle Ratio	$390.00
Power Equipment Group	$915.00
Upfitter Interface Module	$295.00
Platform Running Boards	$445.00
110V/400W Outlet	$75.00
Extra Extra Heavy-Duty Alternator (240 Amp)	N/C
Transmission Power Take-Off Provision	$280.00
Extra Heavy-Service Suspension Package	$125.00
Exterior Backup Alarm (Pre-Installed)	$140.00
Oxford White	N/C
Medium Earth Gray	N/C
Engine: 6.2L 2-Valve SOHC EFI NA V8 (Flex-Fuel)	Included
Transmission: TorqShift 6-Speed Automatic (6R140)	Included
GVWR: 10,900 lb Payload Package	Included

Prices and content availability as shown are subject to change and should be treated as estimates only. Actual base vehicle, package and option pricing may vary from this estimate because of special local pricing, availability or pricing adjustments not reflected in the dealer's computer system. See salesperson for the most current information.

Prepared for: Mr. Andrew Passero
Village of Willowbrook
Prepared by: Garrick Mackiney
07/31/2019

Willowbrook Ford, Inc. | 7301 S Kingery Hwy Willowbrook Illinois | 605275581

2019 F-350 Chassis 4x2 SD Super Cab 168" WB SRW XL (X3E)

Price Level: 915 | Quote ID: 121318G041

City
N/A

Hwy
N/A

As Configured Vehicle	MSRP
Tires: LT275/65Rx18E BSW A/S	Included
Wheels: 18" Argent Painted Steel	Included
HD Vinyl 40/20/40 Split Bench Seat	Included
Radio: AM/FM Stereo	Included
Accessory Delay	Included
Advanced Security Pack	Included
Trailer Tow Mirrors w/Power Heated Glass	Included
MyKey	Included
Power Front & Rear Side Windows	Included
Power Locks	Included
Remote Keyless Entry	Included
SUBTOTAL	$38,485.00
Destination Charge	$1,295.00
TOTAL	**$39,780.00**

Prices and content availability as shown are subject to change and should be treated as estimates only. Actual base vehicle, package and option pricing may vary from this estimate because of special local pricing, availability or pricing adjustments not reflected in the dealer's computer system. See salesperson for the most current information.

Prepared for: Mr. Andrew Passero
Village of Willowbrook
Prepared by: Garrick Mackiney
07/31/2019

Willowbrook Ford, Inc. | 7301 S Kingery Hwy Willowbrook Illinois | 605275581

2019 F-350 Chassis 4x2 SD Super Cab 168" WB SRW XL (X3E)

Price Level: 915 | Quote ID: 121318G041

Vehicle Dimension and Performance Summary

Performance predictions in this report represent an estimate of vehicle performance based on standard operating conditions. Variations in customer equipment, load configuration, ambient conditions, and/or operator driving techniques can cause significant variations in vehicle performance. These values are not representative of results that may be shown in actual dynamometer tests. This report should therefore be used as a guide for comparative vehicle performance.

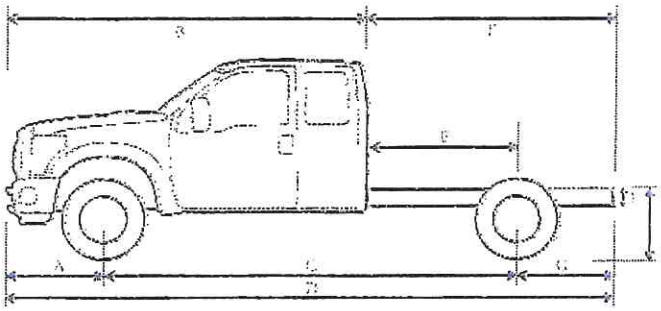

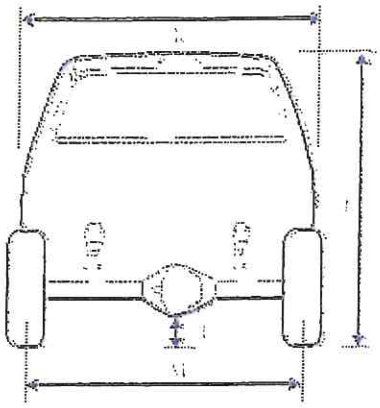

Dimensions

A	Front of Bumper to Front Axle	38.30 in.
B	Front Bumper to Back of Cab (BBC)	146.30 in.
C	Wheelbase (WB)	168.00 in.
D	Overall Length (OAL)	253.30 in.
E	Back of Cab to Rear Axle (CA)	60.00 in.
F	Back of Cab to End of Frame	107.20 in.
G	Rear Axle to End of Frame (AF)	47.20 in.
H	Frame Section Height	N/A
I	Rear Frame Height Unloaded	31.90 in.
I	Rear Frame Height Loaded	26.90 in.
J	Cab Height	78.30 in.
K	Body Width	80.00 in.
L	Maximum Ground Clearance	N/A
L	Minimum Ground Clearance	8.60 in.
M	Front Tread	68.30 in.
M	Rear Tread	68.10 in.

Prepared for: Mr. Andrew Passero
Village of Willowbrook
Prepared by: Garrick Mackiney
07/31/2019

Willowbrook Ford, Inc. | 7301 S Kingery Hwy Willowbrook Illinois | 605275581

2019 F-350 Chassis 4x2 SD Super Cab 168" WB SRW XL (X3E)

Price Level: 915 | Quote ID: 121318G041

Vehicle Dimension and Performance Summary (cont'd)

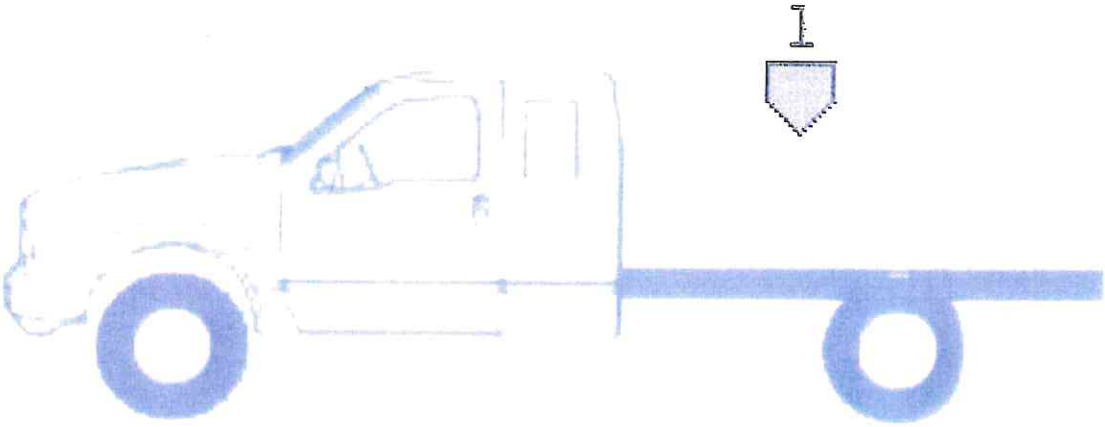

Weight

GVW	Front Axle	Rear Axle	Totals
Chassis	3,548 lbs	2,462 lbs	6,010 lbs
Body	0 lbs	0 lbs	0 lbs
Occupants Weight	600 lbs	300 lbs	900 lbs
1 Max Payload - (Max Payload)	552 lbs	3,438 lbs	3,990 lbs
TOTAL	**4,700 lbs**	**6,200 lbs**	**10,900 lbs**

Ratings	Front Axle	Rear Axle	GVWR
GAWR	**4,700 lbs**	**6,780 lbs**	**10,900 lbs**
Wheels/Tires	6,830 lbs	6,830 lbs	
Suspension	4,700 lbs	6,780 lbs	
Axle	5,250 lbs	7,230 lbs	
Legal Axle Limit	0 lbs	0 lbs	

Vehicle Dimension and Performance Summary (cont'd)

Start, Grade and Speed

Start	Ratio	Desired	Calculated
Start grade capability in 1st gear	3.97	15.00 %	39.02 %
Start grade capability in reverse	3.13	15.00 %	30.72 %

Grade	Ratio	Desired	Calculated
Maximum grade in 4th gear	1.15	3.00 %	11.88 %
Maximum grade in 5th gear	0.86	3.00 %	8.87 %
Maximum grade in 6th gear	0.67	3.00 %	6.97 %

Speed	Desired	Calculated
Top Speed (level grade)	75 mph	121 mph
To meet your requirement you need a maximum axle ratio of 12.56		
Top Speed on 3.0% grade	55 mph	
To meet your requirement you need a maximum of 82 hp		
Cruise Speed	60 mph	83 mph
Engine RPM at desired cruise speed		1,890 rpm

Variables in Use

Rear axle ratio:	4.30/4.30	Peak Torque RPM:	3,800 rpm
Tire size:	275/65R18 (652 rev/mile)	Frontal Area:	38.50 Sq.Ft.
		Cruising RPM	2,600 rpm
Gross Vehicle Weight (GVW):	10,900 lbs	Worst road surface	Typical Highway
Clutch engagement torque:	215 ft.lbs.	Final Drive Ratio:	0.67
Torque conversion ratio:	1.90	Drag Coefficient	0.80
Peak engine torque:	430 ft.lbs.		
Engine Power:	385 hp @ 5,750 rpm		

Prepared for: Mr. Andrew Passero
Village of Willowbrook
Prepared by: Garrick Mackiney
07/31/2019

Willowbrook Ford, Inc. | 7301 S Kingery Hwy Willowbrook Illinois | 605275581

2019 F-350 Chassis 4x2 SD Super Cab 168" WB SRW XL (XSE)

Price Level: 915 | Quote ID: 121318G041

Vehicle Dimension and Performance Summary (cont'd)

Shift Chart

Shift Chart displays mathematical geared speed.

Diesel engines use Governed RPM for shift points.

Gas engines use Peak Torque RPM for shift points.

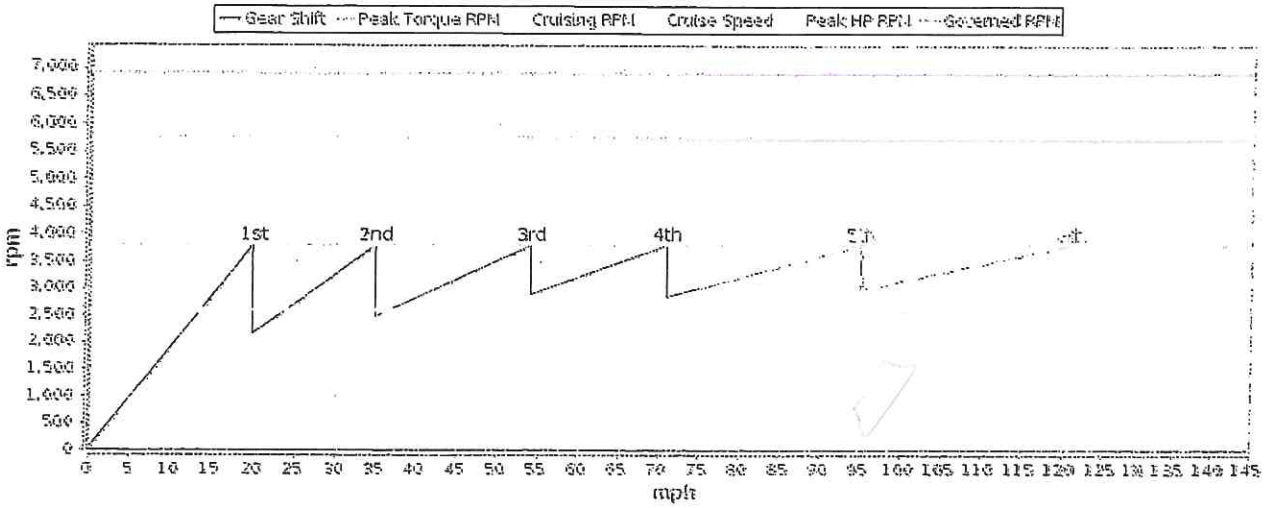

Turning Radius

Turning Radius	28.50 ft

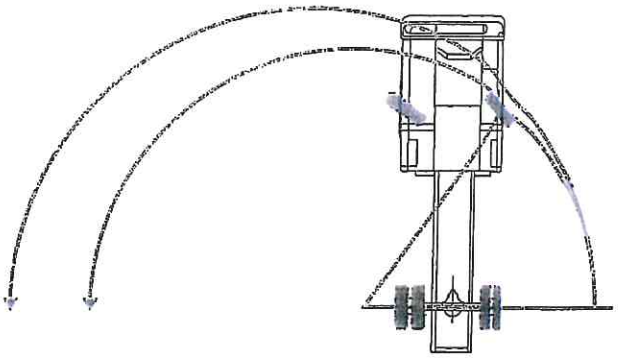

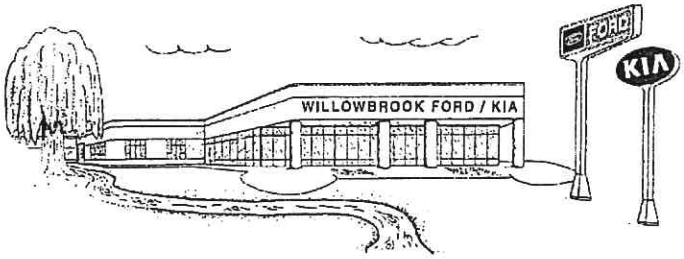

WILLOWBROOK FORD/KIA, INC.

To whom it may concern,

Attached is a brochure to show the comprehensive coverage of the Ford Protect Plans. Based off information given we have selected the PremiumCare policy for the Village and below are the 2 options selected for review.

A 5-year 60,000 mile/2600-hour premiumcare with $0 deductible for the F-350 Supercab Chassis Cab is $3,300.

A 7-year 60,000-mile $0 deductible for the F-350 Supercab Chassis Cab will cost only $3,625.

Please let me know which route the Village wishes to take.

Respectfully,
Garrick T. Mackiney

Willowbrook Ford

www.willowbrookford.com
7301 S. KINGERY HWY. • WILLOWBROOK, IL 60527 • 630 / 986-5000

FORD PROTECT

PremiumCARE

1000+ Covered Components (Partial List)

[illegible]

FORD PROTECT EXTENDED SERVICE PLANS

PLAN	[illegible]	[illegible]	[illegible]	[illegible]	[illegible]	[illegible]	[illegible]
[illegible]	[illegible]	✓	✓	[illegible]	✓	[illegible]	✓
[illegible]	[illegible]	✓	✓	[illegible]	✓	[illegible]	✓
[illegible]	[illegible]	✓	✓	[illegible]	✓	[illegible]	✓
[illegible]	[illegible]	✓	✓	[illegible]	✓	[illegible]	✓
[illegible]	[illegible]	✓	■	[illegible]	✓	[illegible]	✓

FORD PROTECT MAINTENANCE PLANS

PLAN	[illegible]	[illegible]	[illegible]	[illegible]	[illegible]	[illegible]	[illegible]
[illegible]	[illegible]	✓	✓	[illegible]	●	[illegible]	✓
[illegible]	[illegible]	✓	✓	[illegible]	■	●	✓
[illegible]	[illegible]	✓	✓	[illegible]	●	●	✓
[illegible]	[illegible]	✓	✓	[illegible]	■	■	✓

FORD PROTECT

[illegible]

FORD PROTECT

Plan Options

Extended Service Plan

Go Further

Premium Maintenance Plan	Diesel EngineCARE Covers 13 Critical Powertrain Components 13	PowertrainCARE Covers 29 Critical Powertrain Components 29	BaseCARE Covers 84 Major Components 84	ExtraCARE Covers 113 Components 113	PremiumCARE Covers more than 1,000 Components (Partial List) 1000+
Essential Maintenance Plans	Diesel EngineCARE Plus Covers 21 Critical Powertrain Components 21				

Ford Protect PremiumCARE extended service plan is so comprehensive, it's easier to refer you to what isn't covered – here are the highlights.

Generally Covered by Your Auto Insurance –

Repairs Related to Your Maintenance Requirements

Other Components and Repairs –